CODE EVALUATION REPORT

CERUS-1003

PUBLISHED:	December 2021
REVISED:	April 2025
EXPIRATION:	April 2028

PRODUCT: **HERCUWALL® AND HERCUWALL® HD, SERIES 8 INSULATED CONCRETE PANEL SYSTEM TYPE S, SW and A PANELS**

REPORT HOLDER: Tremco CPG, Incorporated

CONTACT DETAILS:
3735 Green Road
Beachwood, Ohio 44122 USA
1-(866)-468-6299
www.tremcocpg.com

CSI DIVISION:
03 00 00 - Concrete
07 00 00 - Thermal and Moisture Protection

CSI SECTION:
03 11 19 - Insulating Concrete Forming
07 21 00 – Thermal Insulation

APPLICABLE CODES:
2021, 2018, 2015 International Building Code (IBC)
2021, 2018, 2015 International Residential Code (IRC)
2022, 2019 California Green Building Standards Code (CALGreen), Title 24, Part 11
2020, 2015 ICC 700 *National Green Building Standard* ™ (ICC 700)
2023, 2020 Florida Building Code (FBC), Building
2023, 2020 Florida Building Code (FBC), Residential

EVALUATED:
Foam Plastic, Surface Burning Characteristics
Thermal Insulation, Physical Performance
Structural Capacity
Combustible Components in Exterior Walls for Use in Types I-IV Construction
Fastener Capacity
Fire-Resistance Ratings

IAS ACCREDITED Product Certification Agency PCA-118

QUALITY - ACCOUNTABILITY - INTEGRITY
TESTING - INSPECTION - CERTIFICATION

www.qai.org
QAI LABORATORIES
LOS ANGELES | TULSA | MIAMI | TORONTO | VANCOUVER | SEOUL | SHANGHAI

1. APPROVED FOR FOLLOWING:

APPROVED TYPES OF CONSTRUCTION:	Type IB, Type IIAB, Type IIIAB, Type IV, Type VAB
APPROVED USE:	Stay-in-place Concrete Forms
APPROVED INSTALLATIONS:	• Bearing and non-load Bearing exterior and interior walls. • Bearing and non-load bearing fire-resistance rated walls. • Exterior and interior walls in non-combustible construction.

2. DESCRIPTION:

2.1 General:

HercuWall® and HercuWall® HD, Series 8 Insulated Concrete Panel Systems are concrete formwork comprised of Type II expanded polystyrene (EPS) foam plastic thermal insulation panels with integrated vertical cavities (studs and posts) for placement of concrete spaced at 12-inches (305 mm) or 8-inches (203 mm) on center spacing and horizontal cavities at the top of panel (bond beam) and bottom of panel (base beam). The HercuWall® system includes a factory installed ShearStrip® in each vertical cavity, with the ShearStrip® alternating in cavity orientation, that protrudes into the vertical cavity for final embedment into the concrete at time of concrete placement, bonding the concrete to the EPS form while providing steel reinforcement.

HercuWall® and HercuWall® HD Series 8 panels are identical except for the thickness of the ShearStrip steel. The heavier gauge ShearStrip utilized in HercuWall® HD provides increased load capacities.

The ShearStrip® components include wide flanges to provide fastening locations on the interior and exterior HercuWall® and HercuWall® HD panel faces. HercuWall® Series 8 panels are available in product models and sizes as outlined in Table 1 of this report. See Section 8.1.2 of this report for additional product details.

HercuWall® and HercuWall® HD Series 8 panels require installation at the jobsite with the minimum concrete specified in Section 2.2.10 of this report.

HercuWall® and HercuWall® HD Series 8 panel's bond beam, at the top of the wall with steel reinforcing bars as described in Section 2.2.9 of this report act as lintels to carry uniform gravity loads over openings. Lintels are available in dimensions as noted in Section 8.1 of this report. SD (Super Duty) Lintels are available in dimensions as noted in Section 8.1 of this report and are utilized where additional gravity load capacity is required. The bond beam is continuous around the exterior wall perimeter complete with rebar per site specifications, tying the HercuWall® panels together to create the final structure.

HercuWall® and HercuWall® HD Series 8 panels are available with single post and double post options, which are utilized where increased loads are anticipated due to point loads. Vertical posts are also used as jamb posts for panel openings. Section 8.2 of this report includes illustrations of typical jamb post configurations. HercuWall® and HercuWall® HD Series 8 headers and sills utilize a horizontally oriented single post profile integrated into the HercuWall® Series panel openings. See Figures in Section 8.2 of this report for typical header and sill configurations. HercuWall® and HercuWall® HD single and double post options have two times the ShearStrip® components compared to standard vertical stud cavities (2 ShearStrip® in single post, 4 ShearStrip® in double post) to provide increased steel reinforcement at post locations. See Section 8.2 of this report for additional details.

HercuWall® and HercuWall® HD Series 8 panels are available in a Solid Shear panel option comprised of Type IX EPS foam plastic thermal insulation panels that provide a solid concrete core and horizontal cavities at the top of panel (bond beam) and bottom of panel (base beam) where additional in-plane shear resistance is required. See Section 8.2 of this report for additional details.

HercuWall® and HercuWall® HD Series 8 Cold-Formed Steel/Concrete (CFC) Box Beams are utilized as girts in unbraced stacked panel, load-bearing and non-load-bearing exterior, and interior demising walls to construct multi-story assemblies. CFC Box Beams provide increased truss bearing surface area when utilized in top loaded braced conditions. CFC Box Beams are utilized with HercuWall HD panels for the attachment of ledgers in face loaded braced conditions. CFC Box Beam configurations can be used in unbraced or braced applications. CFC Box Beams are job site applied. See Section 8.2 of this report for illustrations of typical CFC Box Beam configurations.

HercuWall® and HercuWall® HD Series 8 panels are available in the following products and sizes:

Table 1. HercuWall® and HercuWall® HD Series 8 Products and Accessories[1]

HercuWall® Series 8 Panels							Panel Type
Product Type	Thickness		Maximum Width		Maximum Height		
	inches	mm	inches	mm	inches	mm	
HercuWall®	8 inches	203 mm	48	1219	144	3658	Type S
HercuWall®	8 inches	203 mm	48	1219	144	3658	Type SW[2]
HercuWall®	8 inches	203 mm	48	1219	144	3658	Type A
HercuWall® HD	8 inches	203 mm	48	1219	168	4268	Type S
HercuWall® HD	8 inches	203 mm	48	1219	168	4268	Type SW[2]
HercuWall® HD	8 inches	203 mm	48	1219	168	4268	Type A

1. Sizes of HercuWall® and HercuWall® HD Series 8 panels outside of Table 1 are available upon request and are outside the scope of this report.
2. HercuWall® Type SW panels include a factory applied UV resistant water-resistive barrier on the exterior surface of the HercuWall® panel complying with 2021 IBC Section 1402.2 weather protection through testing to ASTM E331 .

HercuWall® and HercuWall® HD Series 8 panels comply for use in Types I-V construction, including use in fire-resistance rating applications. See Sections 4.4 and 8.3 and Sections 4.5 and 8.4 of this report respectively, for details.

2021 / 2018 / 2015 IBC, 2023 / 2021 FBC and 2021 / 2018 / 2015 IRC construction require Engineering Design considering applicable load requirements, connection details and calculations including site specific requirements for approval by the authority having jurisdiction.

HercuWall® and HercuWall® HD Series 8 panels comply with requirements of the 2023 / 2020 Florida Building Code, Building and 2023 / 2020 Florida Building Code, Residential including use in applications requiring resistance to *large missile* impact in areas designated high-velocity hurricane zone (HVHZ). See Section 9 of this report for further details.

2.2 PRODUCT COMPONENTS

2.2.1 EPS Foam Plastic Panels:

HercuWall® and HercuWall® HD Series 8 panels are expanded polystyrene (EPS*) foam plastic* thermal insulation up to 8.0 inches (203 mm) thickness. The EPS *foam plastic* has a flame spread index of 25 or less and smoke developed index of 450 or less evaluated following UL 723 and complies with the 2021 / 2018 / 2015 IBC Section 2603.3 and the 2021 / 2018 / 2015 IRC Section 316.3 for thicknesses noted. The EPS *foam plastic* has a minimum self-ignition temperature of 650ºF (343ºC) as determined in accordance with ASTM D1929. HercuWall® and HercuWall® HD Series 8 panels require the installation of a code prescribed thermal barrier on the building interior as outlined in Section 4.2.2 of this report.

The EPS foam in HercuWall® and HercuWall® HD Series 8 panels is listed by an *approved agency* and complies with Type II specifications per ASTM C578 for use as thermal insulation. The EPS foam in HercuWall® and HercuWall® HD Series 8 Solid Shear panels is listed by an *approved agency* and complies with Type IX specifications per ASTM C578 for use as thermal insulation.

2.2.2 ShearStrip®:

HercuWall® and HercuWall® HD Shearstrip® components are factory located in the HercuWall® and HercuWall® HD concrete cavities, alternating between cavity faces. The installation includes protrusion for the ShearStrip® into the concrete during placement, providing reinforcing to the concrete structure.

HercuWall® ShearStrip® steel is minimum 24-gauge (0.022 inches) (0.56 mm) thickness with 2-inch (51 mm) flanges and conforms to ASTM A653/A653M SS Grade 40 with G90 galvanized coating. See Section 8.2 of this report for additional details.

HercuWall® HD ShearStrip® steel is minimum 20-gauge (0.033 inches) (0.84 mm) thickness with 2-inch (51 mm) flanges and conforms to ASTM A653/A653M SS Grade 40 with G90 galvanized coating. See Section 8.2 of this report for additional details.

2.2.3 Top and Bottom Tracks:

HercuWall® and HercuWall® HD top and bottom track components are supplied to the jobsite with HercuWall® and HercuWall® HD Series 8 panels. Bottom tracks are used at the base for locating the bottom of the panels prior to placement of concrete. Top tracks are installed on the top of each panel (1 track on exterior side, 1 track on interior side). Top and bottom tracks are non-structural components and may be cut on the jobsite as required for panel installation and to allow passage of mechanical, electrical and plumbing (MEP) elements.

HercuWall® top and bottom track steel is minimum 24-gauge (0.022 inches) (0.56 mm) thickness and conforms to ASTM A653/A653M SS Grade 33 with G90 galvanized coating. HercuWall® HD top and bottom tracks are available in 20-gauge (0.033 inches) (0.84 mm) thickness upon request and conforms to ASTM A653/A653M SS Grade 33 with G90 galvanized coating.

2.2.4 Window and Door Casings:

HercuWall® and HercuWall® HD window and door casing components are factory applied to HercuWall® and HercuWall® HD Series 8 panels, for creating openings for field installation of doors and windows.

HercuWall® and HercuWall® HD window and door casing steel is minimum 20-gauge (0.033 inches) (0.84 mm) thickness. For HVHZ areas, window and door casings are available in 18-gauge (0.043 inches) (1.09 mm) thickness upon request. All casing components conform to ASTM A653/A653M SS Grade 33 with G60 galvanized coating.

2.2.5 CFC Box Beam:

HercuWall® cold form steel / concrete (CFC) Box Beam components are supplied to the jobsite with HercuWall® and HercuWall® HD Series 8 panels. The CFC Box Beam form is installed to the Top Tracks of the panels with self-tapping screws to hold the CFC Box Beam form in position during concrete placement. Shearstrip® extend into the CFC Box Beam form with horizontal #4 rebar for concrete reinforcement. ½ inch (13 mm) diameter J-bolts or #4 rebar dowels are embedded into the CFC Box Beam concrete and protrude into the Base Beam of the above HercuWall® panel for unbraced stacked panel applications. For braced stacked panel applications, embedded J-bolts are utilized to attach top plates (HercuWall and HercuWall HD) or ledgers (HercuWall HD only) to the CFC Box Beam. Reinforcement details, J-bolts spacing, embedment and locations details can be found in Section 8.2 of this report.

HercuWall® CFC Box Beams are cold formed steel of nominal 16-gauge (0.06 inches) (1.6 mm) thickness and conforms to ASTM A653/A653M SS Grade 33 with G60 galvanized coating.

2.2.6 Truss Saddle Bracket:

HercuWall® truss saddle brackets are supplied to the jobsite with HercuWall® and HercuWall® HD Series 8 panels, for attachment of trusses to the top of HercuWall® and HercuWall® HD Series 8 panels. HercuWall® Truss Saddle Brackets are cold formed steel of nominal 20-gauge (0.035 inches) (0.89 mm) thickness and conforms to ASTM A653/A653M SS Grade 33 with G90 galvanized coating. See Section 8.2 for additional details.

2.2.7 Embed:

HercuWall® Embeds are supplied to the jobsite with HercuWall® and HercuWall® HD Series 8 panels, for bottom of wall connections in platform framing to create multi-story construction. HercuWall® Embeds are cold formed steel of nominal 20-gauge (0.035 inches) (0.89 mm) thickness and conforms to ASTM A653/A653M SS Grade 33 with G90 galvanized coating. See Section 8.2 for additional details.

2.2.8 Rebar Clips:

HercuWall® Rebar Clips are factory applied to ShearStrip® components. The Rebar Clips are connected by an integral snap-on feature, that allows positioning for placement of rebar before concrete placement.

2.2.9 Rebar (reinforcement):

Rebar is used in the factory and jobsite installations of HercuWall® and HercuWall® HD Series 8 panels and must comply with ASTM A615-15a Grade 60, with a minimum yield strength of 60 ksi (414 Mpa) and a nominal bar diameter of ½ inch (13 mm), #4 rebar. A continuous #4 rebar must be job site applied in the bond beam around the entire perimeter of the HercuWall® Series 8 (see illustrations in Section 8.2). All rebar lap splices are to be a minimum of 48 bar diameter. Bond beams or SD Lintels above openings must be designed as a lintel in accordance with figures found in Section 8.2 of this report.

2.2.10 Concrete:

Concrete materials and proportioning for use with HercuWall® and HercuWall® HD Series 8 panels shall conform to ACI 318 and be composed of the following components: 3/8 inch (9.5 mm) maximum size aggregate, with coarse aggregate not to exceed 45%, with a slump flow test spread of 23 inches ± 2 inches (584 mm ± 51 mm). Concrete used shall have a minimum compressive strength of 4,000 psi (27.6 Mpa) at 28 days cure.

2.2.11 Water-Resistive Barrier:

HercuWall® and HercuWall® HD Series 8, Type SW panels incorporate a polyester film laminated over the exterior EPS surface to create a weather-resistive barrier complying with 2021 / 2018 IBC Section 1402.2, 2015 IBC Section 1403.2, 2021 / 2018 / 2015 IRC Section R703.1.1, 2023 / 2020 Florida Building Code Section 1403.2. The polyester film is applied at a nominal thickness of 3 mils (0.003 inches) (0.076 mm). HercuWall® WRB film is UV stabilized for durability and weathering resistance after installation.

2.2.12 HercuWall® Seaming Tape:

HercuWall® and HercuWall® HD Series 8 SW panels require installation of HercuWall® Seaming Tape to ensure continuity of the water-resistive barrier at exterior panel joints to prevent water ingress. HercuWall® Seaming Tape is UV stabilized for durability and weathering resistance after installation.

HercuWall® Seaming Tape is of 3 mils (0.003 inches) (0.076 mm) nominal thickness, and of 3.78-inch (96 mm) width for factory application, and 1.89-inch (48 mm) width for field applications.

3. DESIGN:

Design loads to be resisted by HercuWall® and HercuWall® HD Series 8 panels shall be determined in accordance with the applicable building codes.

Loads to be resisted by HercuWall® and HercuWall® HD Series 8 panels shall not exceed the allowable loads outlined in Section 8.1 of this report.

Loads to be resisted by HercuWall® and HercuWall® HD single and double post assemblies shall not exceed the allowable loads outlined in Section 8.1 of this report.

Loads to be resisted by HercuWall® and HercuWall® HD headers and sills shall not exceed the allowable loads outlined in Section 8.1 of this report. Consideration for transverse loading over the width of the header and sill length is required in the Engineering Design.

Loads to be resisted by HercuWall® and HercuWall® HD bond beams acting as lintels shall not exceed the allowable loads outlined in Section 8.1 of this report. Engineering Design is to consider the tributary load over openings transferred through the lintel beam to HercuWall® posts, and transverse loading over the width of the bond beam / lintels.

Loads to be resisted by HercuWall® SD Lintels shall not exceed the allowable loads outlined in Section 8.1 of this report. Engineering Design is to consider the tributary load over openings transferred through the lintel beam to HercuWall® and HercuWall® HD posts, and transverse loading over the width of the bond beam / lintels.

CFC Box Beam capacities are to be designed in accordance with 2021 / 2018 / 2015 IBC, 2023 FBC Section 19 and ACI 318. Combined axial and transverse loads on wall assemblies which include CFC Box Beam are to be within allowable loading outlined in Section 8.1 of this report.

End of wall conditions where intersecting wall angles are greater than 135 degrees, but less than 180 degrees require a post element at both sides of the intersection.

Window and door openings require a jamb post element adjacent to both vertical sides of the opening.

Allowable connections to HercuWall® and HercuWall® HD panels are outlined in Section 8.1 for perpendicular and parallel members. Connections outside of this report are to be designed by a Registered Design Professional and comply with the Engineering Design.

Allowable connection capacities at the bottom of the HercuWall® and HercuWall® HD panels to the foundation are noted in Section 8.1. Connections outside of this report are to be designed by a Registered Design Professional and comply with the Engineering Design.

Where used in fire-resistance rated construction, HercuWall® and HercuWall® HD Series 8 panels are approved for use to 100% allowable load capacities outlined in Section 8.3 of this report.

Loads in the tables may be applied to shorter panel spans or lengths/heights where supported by Engineering Design. Engineering Design is to consider load paths and anchorage of the HercuWall® and HercuWall® HD Series 8 panel assembly, which are outside the scope of this report.

Extrapolation of allowable loads is outside the scope of this report.

4. INSTALLATIONS:

4.1 General:

Installation of HercuWall® and HercuWall® HD Series 8 panels must comply with the manufacturer's published installation instructions, this report, and the applicable code(s). Where conflicts exist, this report and the applicable building code govern. Connections not identified in this report including connection of building elements to the HercuWall® and HercuWall® HD Series 8 panel system, and connection of the HercuWall® Series 8 panels to the underlying structure is outside the scope of this report and shall be designed by a Registered Design Professional. Inspection of concrete anchors is to be part of the Special Inspection as outlined in Section 4.1.1 of this report. Installations evaluated for load carrying capacity are outlined in Sections 8.1 and shown in figures found in Section 8.2 of this report.

4.1.1 Special Inspection:

IBC and FBC: HercuWall® and HercuWall® HD Series 8 panel construction requires special inspections as defined by Section 1705 for concrete construction Section 1705.3 of the 2021 / 2018 / 2015 IBC. Special inspections are to include activities as outlined in 2021 / 2018 / 2015 IBC Table 1705.3 (2021 IBC Type Items 1., 3., 4., 5., 6., 7., 8., 13., and 14) (2018 / 2015 IBC Type Items 1., 3., 4., 5., 6., 7., 8., 11., and 12). This includes concrete cylinder testing. Where exterior cladding is exterior insulation and finish systems (EIFS), special inspection in accordance with 2021 IBC Section 1705.17 and 2018 / 2015 IBC Section 1705.16 is required. Where a water-resistive barrier coating complying with ASTM E2570 is applied over HercuWall® Type S and Type A panels, special inspection is required per the 2021 IBC Section 1705.17.1 and 2018 / 2015 IBC Section 1705.16.1.

FBC and IRC: Where used as walls under the FBC and IRC, Special Inspection is to be conducted following requirements of the IBC as noted above.

4.2 Interior:

4.2.1 General:

HercuWall® and HercuWall® HD Series 8 panels are to be separated from the interior space in accordance with Section 4.2.2 and 4.2.3 of this report, as appropriate. Connection of interior decorum, furniture and cabinetry are approved when installed in accordance with the manufacturer's installation instructions.

4.2.2 Occupied Space:

4.2.2.1 Use with a Code Prescribed Thermal Barrier.

2021 / 2018 / 2015 IBC: Except as provided in Sections 2603.4.1 and 2603.9 of the 2021 / 2018 / 2015 IBC, HercuWall® and HercuWall® HD Series 8 panels exposed to occupancies of the building interior shall be covered by a thermal barrier of minimum ½ inch thick gypsum board complying with ASTM C1396, or by a material complying with NFPA 275 compatible for use with the Type II EPS insulation at thicknesses of 8 inches (203 mm) or greater. Gypsum shall be mechanically connected to the HercuWall® and HercuWall® HD ShearStrip® steel elements in accordance with the applicable code. Taping and mudding of fastener heads and joints are optional where gypsum is used, except where HercuWall® and HercuWall® HD Series 8 panels are used in Types I-IV and fire-resistance rated applications, where installation shall conform to Sections 4.5 and 8.4 or Sections 4.4 and 8.3 of this report as appropriate.

2021 / 2018 / 2015 IRC: Unless allowed under Section R316.5 of the 2021 / 2018 / 2015 IRC, HercuWall® and HercuWall® HD Series 8 panels exposed to occupancies of the building shall be protected by a thermal barrier of minimum 1/2 inch gypsum wall board complying with ASTM C1396, 23/32 inch thick structural wood panel, or a material complying with NFPA 275 compatible for use with the Type II EPS insulation at thicknesses of 8 inches (203 mm) or greater. Where gypsum or structural wood panels are used, the thermal barrier shall be mechanically connected to the HercuWall® and HercuWall® HD ShearStrip® steel elements in accordance with the applicable code. Taping and mudding of fastener heads and joints are optional where gypsum is used, except where HercuWall® Series 8 panels are used in Types VA fire-resistance rated applications, where installation shall conform to Sections 4.4 and 8.3 of this report.

4.2.2.2 Use Without a Code Prescribed Thermal Barrier.

No alternative thermal barriers are approved under this current report for use with HercuWall® and HercuWall® HD Series 8 panels.

4.2.3 Attic and Crawlspace:

4.2.3.1 Use with a Code Prescribed Ignition Barrier:

HercuWall® and HercuWall® HD Series 8 panels exposed in attics and crawlspaces shall be protected with a code prescribed ignition barrier as defined in the Section 2603.4.1.6 of the 2021 / 2018 / 2015 IBC and Sections R316.5.3 and R316.5.4 of the 2021 / 2018 / 2015 IRC. The ignition barrier is to cover all exposed foam.

4.2.3.2 Use Without a Code Prescribed Ignition Barrier:

No alternative ignition barriers are approved under this current report for use over HercuWall® and HercuWall® HD Series 8 panels.

4.3 Exterior Walls:

4.3.1 Above Grade:

4.3.1.1 Sheathing:

Exterior walls requiring sheathing as a structural element in the Engineering Design, shall have sheathing type and installation done in accordance with the applicable code and the Engineering Design. Where used in Types I-IV and fire-resistance rated construction, sheathing shall comply with Section 4.5 and 8.4 or Section 4.4 and 8.3 of this report as appropriate.

4.3.1.2 Weather Protection:

HercuWall® and HercuWall® HD Series 8 S and A panels used as exterior walls require installation with a code prescribed weather-resistive barrier, exterior cladding and flashings for providing weather protection in accordance with 2021 / 2018 IBC Section 1402.2 and 2015 IBC / 2023 FBC Section 1403.2 and Section R703.1.1 of the 2021 / 2018 / 2015 IRC. Water-resistive barriers and exterior cladding materials shall comply with 2021 / 2018 IBC Section 1403 or 2015 IBC / 2023 FBC Section 1404 and or 2021 / 2018 / 2015 IRC Section R703.3 as appropriate. Water resistive barriers and cladding components shall be installed in accordance with the applicable code and the manufacturer's installation instructions.

HercuWall® and HercuWall® HD Series 8 SW panels include a UV resistant, laminated water-resistive barrier, and require HercuWall® Seam Tape at joints, exterior cladding and flashings for providing weather protection in accordance with 2021 / 2018 Section 1402.2, 2015 IBC Section 1403.2 and 2021 / 2018 / 2015 IRC Section R703.1.1. Exterior cladding materials shall comply with 2021 / 2018 IBC Section 1403 or 2015 IBC / 2023 FBC Section 1404 and 2021 / 2018 / 2015 IRC Section R703.3 as appropriate.. Water resistive barriers and cladding components shall be installed in accordance with the applicable code and the manufacturer's installation instructions.

Where used in Types I-IV construction, HercuWall® and HercuWall® HD Series 8 panels weather protection elements shall comply with Section 4.5 and 8.4 of this report.

4.3.1.3 Vapor Retarders:

HercuWall® and HercuWall® HD Series 8 panels EPS component is a Type II vapor retarder at thicknesses 8 inches (203 mm) or greater, so where a Class II vapor retarder is required, this can be omitted.

4.3.1.4 Termite Protection:

Where HercuWall® and HercuWall® HD Series 8 panels are installed in areas defined as "very heavy" as indicated in Figure 2603.8 of the 2021 / 2018 / 2015 IBC, 2023 FBC and Figure R301.2(6) of the 2021 / 2018 / 2015 IRC and where the EPS foam component is located within 6 in. (152 mm) above grade from exposed earth, construction is to follow Section 2603.8 of the 2021 / 2018 / 2015 IBC, 2023 FBC and R318.4 of the 2018 / 2015 IRC. This construction requires all structural elements of walls, floors, ceilings and roofs to be of noncombustible materials or preservative-treated wood, unless an approved method of protecting the foam plastic from subterranean termite damage is provided to the authority having jurisdiction.

4.3.2 Below Grade:

The use of HercuWall® and HercuWall® HD Series 8 panels for below grade has not been evaluated and is outside the scope of this report.

4.4 Fire-Resistance-Rated Construction:

4.4.1 1-Hour Load-Bearing Assemblies:

HercuWall® and HercuWall® HD Series 8, including CFC Box Beams and Solid Shear panels, are approved for use in 1-hour load-bearing fire-resistance rated applications, where construction of the wall assembly includes 1 layer of minimum 5/8-inch (16 mm) Type X gypsum board complying with ASTM C1396 on each HercuWall® face, with joints tapped and mudded with a minimum Level 2 finish per ASTM C840. The addition of cladding and a water-resistive barrier is not considered to reduce the 1-hour fire-resistance rating, where connection of the water resistive barrier and cladding penetrates the ShearStrip® components, and no load is exerted on the exterior gypsum sheathing element. See Section 8.3.1 of this report for details of installation for use in1-hour load bearing fire-resistance-rated applications.

HercuWall® and HercuWall® HD Series 8 including Solid Shear Panels and CFC Box Beams of various combinations as outlined in this report, are approved for use in 1-hour load-bearing fire-resistance rated common wall applications under the 2021 / 2018 / 2015 IRC, Sections 302.2 and 302.3 for two-family dwellings and townhouses. See Section 8.3.1 of this report for 1-hour fire-resistance rated assembly details.

4.4.2 2-Hour Load-Bearing Assemblies:

HercuWall® and HercuWall® HD Series 8 including CFC Box Beams and Solid Shear panels are approved for use in 2-hour load-bearing fire-resistance rated applications where construction of the wall assembly includes 2 layers of minimum 5/8-inch (16 mm) Type X gypsum board complying with ASTM C1396 on each HercuWall® face. Gypsum board joints are required offset a minimum of 24 inches (610 mm) between gypsum layers. The interior gypsum face joints are to be tapped and mudded with a minimum Level 2 finish per ASTM C840. The addition of cladding and a water-resistive barrier is not considered to reduce the 2-hour fire-resistance rating, where connection of the water resistive barrier and cladding penetrates the ShearStrip® components, and no load is exerted on the exterior gypsum sheathing element. See Section 8.3.2 of this report for details of installation for use in 2-hour load bearing fire-resistance-rated applications.

HercuWall® and HercuWall® HD Series 8 including Solid Shear Panels and CFC Box Beams of various configurations outlined in this report are approved for use in 2-hour load-bearing fire-resistance rated fire wall and party wall applications where installation is in accordance with requirements as outlined in Section 706 of the 2021 / 2018 / 2015 IBC where floors are installed at equal elevations on each side of wall for structural stability and installation is limited to Type V construction. HercuWall® and HercuWall® HD Series 8 including Solid Shear Panels and CFC Box Beams of configurations outlined in this report are approved for use in 2-hour load-bearing fire-resistance rated common wall applications under the 2021 / 2018 / 2015 IRC Sections 302.2 and 302.3 for two-family dwellings and townhouses. See Section 8.3.2 of this report for 2-hour fire-resistance rated assembly details.

4.5 Type I-IV (Non-combustible) Construction

HercuWall® and HercuWall® HD Series 8 including Solid Shear panels are approved for use in exterior walls of Types I-IV (non-combustible) construction through evaluation to NFPA 285 for buildings greater than 40 ft (12 m) height, with EPS foam component having potential heat of 2,250 BTU/ft^2 (25.5 MJ/m^2) per 1-inch (25 mm) thickness of insulation evaluated following NFPA 259.

See Section 8.4 of this report for details of installation for use in Types I-IV construction applications.

5. LIMITATIONS

- Projects using HercuWall® and HercuWall® HD Series 8 panel systems require Engineering Design submitted to the authority having jurisdiction, considering anticipated loading, the complete load path from the roof to the foundation, connection details and calculations in accordance with the applicable building code. When used in stacked panel applications, the load paths for the CFC Box Beam are to be considered. Anticipated loads shall not exceed allowable loads specified in this report.
- Installation of the HercuWall® and HercuWall® HD Series 8 panel system is to match this report, the Engineering Design and site specifications.
- CFC Box Beams where used for ledger connection, are limited to HercuWall HD panels. Ledger connections to CFC Box Beams on panels other than HercuWall HD are outside the scope of this report.
- HercuWall® and HercuWall® HD Series 8 panels are required to be separated from interior space by an approved thermal barrier when installed in accordance with Section 4.2.2 of this report and the applicable code. Where used in fire-resistant rated construction or Types I-IV construction as exterior walls, the thermal barrier is to comply with Sections 4.4 and 8.2 or 4.5 and 8.3 respectively.
- HercuWall® and HercuWall® HD Series 8 panels used in Attic and Crawlspace applications require installation of an ignition barrier in accordance with Section 4.2.3.1 of this report.
- HercuWall® and HercuWall® HD Series 8 S panels are required to be protected by a code-compliant water-resistive barrier prior to cladding application when installed on the exterior of the building above grade.
- HercuWall® and HercuWall® HD Series 8 SW panels require application of HercuWall® Seam Tape at panel joints and panel to track locations to seal the building envelope from water ingress, prior to installation of exterior claddings in accordance with Section 4. 3.1 of this report.
- HercuWall® and HercuWall® HD Series 8 when used in fire-resistance-rated construction are to be installed in accordance with Section 4.4 and Section 8.2 of this report.
- HercuWall® and HercuWall® HD Series 8 when used as Fire Walls or Party walls installed in accordance with Section 706 of the 2021 / 2018 / 2015 IBC, floors are required installed at equal elevations on each wall side and installation is limited to Type V construction.
- HercuWall® and HercuWall® HD Series 8 when used as common walls of townhouses or two-family dwellings, are to be installed in accordance with Section 302.2 or 302.3 of the 2021 / 2018 / 2015 IRC as appropriate.
- HercuWall® and HercuWall® HD Series 8 panels used in Types I-IV Construction are to be installed in accordance with Section 4.5 and Section 8.3 of this report.
- HercuWall® and HercuWall® HD Series 8 panels installed in termite activity areas defined as “very heavy” require protection in accordance with Section 2603.8 of IBC and FBC or Section R318.4 of IRC as applicable, as outlined in Section 4.3.1.4 of this report.
- Special inspections are required as per Section 1705 of the 2021 / 2018 / 2015 IBC in accordance with Section 4.1.1 of this report.
- HercuWall® and HercuWall® HD Series 8 panels and accessories are manufactured in Tempe, AZ with inspections by QAI Laboratories.

6. SUPPORTING INFORMATION:

The following data has been evaluated for HercuWall® and HercuWall® HD Series 8 panels:

- Data outlining compliance for surface burning characteristics evaluated to UL 723.
- Data outlining compliance of Type II EPS foam for use as thermal insulation per ASTM C578.
- Data outlining strength testing conducted following method ASTM E72.
- Data outlining wind and impact resistance testing conducted following method TAS 201, TAS 202 and TAS 203.
- Data outlining use as a water-resistive barrier.
- Data outlining details for use in load-bearing fire-resistance rated construction per ASTM E119.
- Data outlining compliance with NFPA 285 for use of combustible materials in exterior walls in non-combustible construction.
- Data outlining compliance with 1-hour and 2-hour fire-resistance ratings for CFC Box Beam transitions with and without gypsum protection following ASTM E814.
-

7. MARKING:

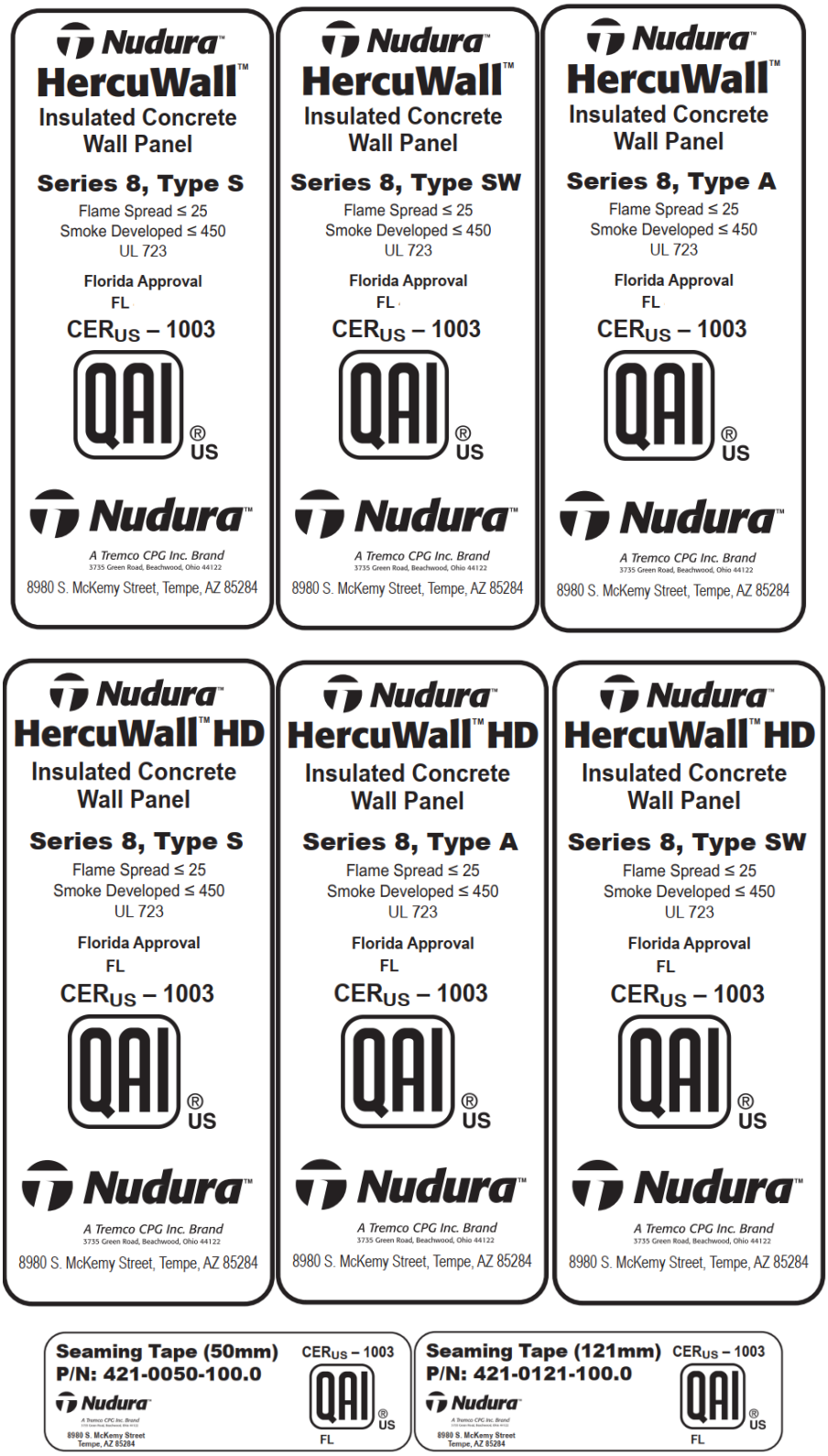

Figure 1. Example of HercuWall®, HercuWall® HD Series 8 Panels, Posts and Seam Tape Labels

8. RESULTS / RATINGS AND DETAILS:

8.1 HercuWall® and HercuWall® HD Series 8 Panels Allowable Load Capacities:

Table 2. HercuWall® Series 8 Panels Allowable Axial and Transverse Combined Loads 12-inch (305 mm) Stud Spacing

HercuWall - Panel Types S, SW and A – Stud Spacing 12-inches (305 mm)[1,2,3,4,5]												
TRANSVERSE LOAD (psf)	0	5	10	15	20	25	28	30	35	40	45	48
PANEL HEIGHT (inches)	AXIAL CAPACITY (lbs/ft)											
Up to 102	5890	5880	5870	5860	5850	5845	5840	5835	5825	5815	5805	5800
108	4980	4830	4680	4530	4375	4225	4135					
114	4930	4770	4615	4455	4295	4135	4040					
120	4880	4715	4550	4380	4210	4045	3945					
126	4830	4655	4480	4305	4130	3955	3850					
132	4780	4600	4415	4230	4050	3865	3755					
138	4730	4540	4350	4160	3965	3775	3660					
Maximum 144	4530	4358	4176	3993	3806	3624						

1. Transverse and axial combined load capacity is determined with bond and base beam supports. Design of connection details for anchorage of panel to substrate is outside the scope of this report and is to follow the Engineering Design.
2. Transverse and axial combined load capacity are determined for panels only and do not consider the contribution from sheathing materials.
3. Connection details including the connection of wall panels to the underlying structure is outside the scope of this report except where noted in Section 8.1 of this report, and are to be in accordance with the Engineering Design and project specifications.
4. Allowable loads are based off maximum panel capacity for loading conditions shown, with a factor of safety of 3 applied.
5. Axial loads were determined with an eccentricity of t/6 (0.92 inches) from center of panel.

Table 3. HercuWall® Series 8 Panels Allowable Axial and Transverse Combined Loads 8-inch (203 mm) Stud Spacing

HercuWall® - Panel Types S, SW and A – Stud Spacing 8-inches (203 mm)[1,2,3,4,5]												
TRANSVERSE LOAD (psf)	0	7.5	15	22.5	30	37.5	42	45	52.5	60	67.5	72
PANEL HEIGHT (inches)	AXIAL CAPACITY (lbs/ft)											
Up to 102	8835	8820	8810	8795	8780	8765	8755	8750	8735	8725	8710	8700
108	7475	7245	7020	6790	6565	6335	6200					
114	7400	7160	6920	6680	6440	6200	6060					
120	7320	7070	6820	6570	6320	6070	5915					
126	7245	6985	6720	6460	6195	5930	5775					
132	7170	6895	6620	6345	6070	5800	5630					
138	7095	6810	6520	6235	5950	5660	5490					
Maximum 144	6811	6537	6259	5985	5712	5434						

1. Transverse and axial combined load capacity is determined with bond and base beam supports. Design of connection details for anchorage of panel to substrate is outside the scope of this report and is to follow the Engineering Design.
2. Transverse and axial combined load capacity are determined for panels only and do not consider the contribution from sheathing materials.
3. Connection details including the connection of wall panels to the underlying structure is outside the scope of this except where noted in Section 8.1 of this report, and are to be in accordance with the Engineering Design and project specifications.
4. Allowable loads are based off maximum panel capacity for loading conditions shown, with a factor of safety of 3 applied.
5. Axial loads were determined with an eccentricity of t/6 (0.92 inches) from center of panel.

Table 4. HercuWall® Series 8 Single Post Allowable Axial and Transverse Combined Loads

HercuWall® - Single Post Type S and SW – Post Interconnected with Double ShearStrip® (1 ShearStrip® Each Cavity Face) [1,2,3,4,5]											
TRANSVERSE LOAD (plf)	0	10	15	20	30	40	50	56.8	70	80	90.7
POST HEIGHT (inches)	AXIAL CAPACITY (lbs)										
Up to 102	7060	7057	7055	7055	7050	7050	7045	7040	7040	7035	7030
108	6160	6040	5975	5915	5790	5670	5545	5460			
114	6110	5980	5915	5850	5720	5590	5460	5370			
120	6060	5925	5855	5790	5650	5515	5380	5285			
126	6010	5870	5795	5725	5580	5440	5295	5195			
132	5960	5810	5735	5660	5510	5360	5211	5110			
138	5910	5755	5675	5600	5440	5285	5130	5020			
Maximum 144	5673	5524	5376	7376	5222	5073	4924				

1. Transverse and axial combined load capacity is determined with bond and base beam supports. Design of connection details for anchorage of panel to substrate is outside the scope of this report and is to follow the Engineering Design.
2. Transverse and axial combined load capacity are determined for post only and do not consider the contribution from sheathing materials.
3. Connection details including the connection of wall panels to the underlying structure is outside the scope of this report except where noted in Section 8.1 of this report, and are to be in accordance with the Engineering Design and project specifications.
4. Allowable loads are based off maximum panel capacity for loading conditions shown, with a factor of safety of 3 applied.
5. Axial loads were determined with an eccentricity of t/6 (0.92 inches) from center of panel.

Table 5. HercuWall® Series 8 Double Post Allowable Axial and Transverse Combined Loads

HercuWall® - Double Post / T Post Type S and SW – Post Interconnected with Double ShearStrip® (2 ShearStrip® Each Cavity Face) [1,2,3,4,5]												
TRANSVERSE LOAD (plf)	0	15	30	45	60	75	90	105	107	135	150	165
POST HEIGHT (inches)	AXIAL CAPACITY (lbs)											
Up to 102	11260	11260	11260	11260	11260	11260	11260	11260	11260	11260	11260	11260
108	11260	11260	11260	11260	11260	11260	11260	11260	11260			
114	11260	11260	11260	11260	11260	11260	11260	10652	10535			
120	11260	11260	11260	11260	11260	11185	10400	9615	9510			
126	11260	11260	11260	11260	10860	10145	9435	8720	8625			
132	11260	11260	11195	10545	9895	9245	8595	7945	7860			
138	11430	10835	10240	9645	9050	8460	7865	7270	7190			
Maximum 144	10972	10401	9830	9259	8688	8121	7550	6979[6]				

1. Transverse and axial combined load capacity is determined with bond and base beam supports. Design of connection details for anchorage of panel to substrate is outside the scope of this report and is to follow the Engineering Design.
2. Transverse and axial combined load capacity are determined for post only and do not consider the contribution from sheathing materials.
3. Connection details including the connection of wall panels to the underlying structure is outside the scope of this report except where noted in Section 8.1 of this report, and are to be in accordance with the Engineering Design and project specifications.
4. Allowable loads are based off maximum panel capacity for loading conditions shown, with a factor of safety of 3 applied.
5. Axial loads were determined with an eccentricity of t/6 (0.92 inches) from center of panel.
6. Maximum allowable transverse load is 97 plf.

Table 6. HercuWall® Series 8 Header and Sill Allowable Transverse Loads

HercuWall® - Series 8 Header and Sill Allowable Transverse Loads[1,2,3] Panel Types S, SW and A	
LENGTH (inches)	**ALLOWABLE TRANSVERSE LOAD (plf)**
Up to 102	90
108	65
114	59
120	57
126	57
132	57
138	57
Maximum 144	50

1. Allowable loads are based off maximum header and sill capacity for loading conditions shown, with a factor of safety of 3 applied.
2. Engineering Design is to consider tributary width of the header and sill for determination of transverse load.
3. Header and sill are required to be reinforced with interior and exterior oriented ShearStrip® steel elements.

Table 7. Large Missile Impact Resistant HercuWall® Series 8 Allowable Design Pressures - High Velocity Hurricane Zones (FBC)

HercuWall® - Series 8 HVHZ Wind Resistance Design Pressure (FBC) Panel Types S, SW and A – Stud Spacing 12-inches (305 mm)[1,2,3,4]	
PANEL HEIGHT (inches)	DESIGN PRESSURE (psf)
108	86
114	72.5
120	62
126	58
132	55

1. Design Pressure is determined with bond and base beam supports. Design of connection details for anchorage of panel to substrate is outside the scope of this report and is to follow the Engineering Design.
2. Design Pressure is determined for panels only and does not consider the contribution from sheathing materials.
3. Connection details including the connection of wall panels to the underlying structure is outside the scope of this report except where noted in Section 8.1 of this report, and are to be in accordance with the Engineering Design and project specifications.
4. Allowable loads are based off maximum panel capacity for loading conditions shown, with a factor of safety of 1.5 applied based on evaluation in accordance with TAS 202, TAS 201, TAS 203.

Table 8. Large Missile Impact Resistant HercuWall® Series 8 - Allowable Axial Capacities High Velocity Hurricane Zones (FBC)

HercuWall® - Series 8 Axial Capacity – Florida Building Code (FBC) Panel Types S, SW and A – Stud Spacing 12-inches (305 mm)[1,2,3,4,5]	
PANEL HEIGHT (inches)	AXIAL CAPACITY (plf)
108	5813
114	5648
120	5471
126	5284
132	5090

1. Axial load capacity is determined with bond and base beam supports. Design of connection details for anchorage of panel to substrate is outside the scope of this report and is to follow the Engineering Design.
2. Axial load capacity is determined for panels only and does not consider the contribution from sheathing materials.
3. Connection details including the connection of wall panels to the underlying structure is outside the scope of this report except where noted in Section 8.1 of this report, and are to be in accordance with the Engineering Design and project specifications.
4. Allowable loads are based off maximum panel capacity for loading conditions shown, with a factor of safety of 3 applied.
5. Axial loads were determined with an eccentricity of t/6 (0.92 inches) from center of panel.

Table 9. HercuWall® HD Series 8 Panels Allowable Axial and Transverse Combined Loads 12-inch (305 mm) Stud Spacing

HercuWall® HD - Panel Types S, SW and A – Stud Spacing 12-inches (305 mm)[1,2,3,4,5]															
TRANSVERSE LOAD (psf)	0	5	10	25	30	35	40	45	50	55	60	65	70	75	80
PANEL HEIGHT (inches)	AXIAL CAPACITY (lbs/ft)														
Up to 108	9274	9123	9067	8684	8500	8348	8281	8124	7935	7807	7739	7576	7416	7386	7250
114	8733	8567	8488	8064	7893	7807	7646	7494	7411	7234	7183	7043	6902	6763	
120	8230	8054	7881	7521	7336	7259	7097	7004	6857	6774	6631	6487	6345		
126	7702	7598	7416	7027	6930	6766	6673	6515	6426	6335	6194	6043			
132	7333	7188	7042	6595	6490	6392	6235	6140	6033	5885	5785				
138	7156	6958	6828	6324	6155	6051	5887	5781	5627	5476					
144	7000	6792	6600	6069	5898	5732	5566	5364	5246						
150	6806	6589	6373	5780	5610	5435	5261	5091							
156	6633	6394	6173	5512	5332	5143	4951								
162	6475	6234	5966	5289	5050	4859									
Maximum 168	6378	6082	5835	5042	4843										

1. Transverse and axial combined load capacity is determined with bond and base beam supports. Design of connection details for anchorage of panel to substrate is outside the scope of this report and is to follow the Engineering Design.
2. Transverse and axial combined load capacity are determined for panels only and do not consider the contribution from sheathing materials.
3. Connection details including the connection of wall panels to the underlying structure is outside the scope of this report except where noted in Section 8.1 of this report, and are to be in accordance with the Engineering Design and project specifications.
4. Allowable loads are based off maximum panel capacity for loading conditions shown, with a factor of safety of 3 applied.
5. Axial loads were determined with an eccentricity of t/6 (0.92 inches) from center of panel.

Table 10. Face-Loaded HercuWall® HD Series 8 Panels Allowable Axial and Transverse Combined Loads 12-inch (305 mm) Stud Spacing with CFC Box Beam

HercuWall® HD - Panel Types S, SW and A – Stud Spacing 12-inches (305 mm)[1,2,3,4,5]															
TRANSVERSE LOAD (psf)	0	5	10	20	25	30	35	40	45	50	55	65	75	80	90
PANEL HEIGHT (inches)	AXIAL CAPACITY (lbs/ft)														
Up to 108	5045	4988	4927	4801	4738	4676	4612	4547	4484	4419	4356	4221	4089	4026	3888
114	4777	4713	4650	4525	4461	4398	4331	4269	4204	4141	4076	3947	3814	3744	
120	4505	4439	4372	4243	4181	4116	4048	3981	3923	3859	3796	3667	3534		
126	4283	4212	4122	3981	3933	3856	3796	3729	3647	3585	3520	3379			
132	4069	3992	3920	3760	3703	3608	3559	3478	3415	3340	3183				
138	3897	3818	3745	3597	3542	3450	3376	3300	3229	3139					
144	3731	3644	3561	3412	3348	3276	3169	3136	2896	2749					
150	3565	3478	3393	3226	3145	3065	2988	2746	2590						
156	3400	3314	3230	3062	2962	2793	2623	2456							
162	3284	3198	3112	2919	2742	2566	2390								
Maximum 168	3251	3164	3084	2774	2590	2222									

1. Transverse and axial combined load capacity is determined with CFC Box Beam and base beam supports. Design of connection details for anchorage of panel to substrate is outside the scope of this report and is to follow the Engineering Design.
2. Transverse and axial combined load capacity are determined for panels only and do not consider the contribution from sheathing materials.
3. Connection details including the connection of wall panels to the underlying structure is outside the scope of this report except where noted in Section 8.1 of this report, and are to be in accordance with the Engineering Design and project specifications.
4. Allowable loads are based off maximum panel capacity for loading conditions shown, with a factor of safety of 3 applied.
5. Axial loads were determined with an eccentricity of t/2.67 (3 inches) from center of panel.

Table 11. HercuWall® HD Series 8 Panels Allowable Axial and Transverse Combined Loads 8-inch (203 mm) Stud Spacing

HercuWall® HD - Panel Types S, SW and A – Stud Spacing 8-inches (305 mm)[1,2,3,4,5]															
TRANSVERSE LOAD (psf)	0	7.5	15	30	45	52.5	60	67.5	75	82.5	90	97.5	105	112.5	120
PANEL HEIGHT (inches)	AXIAL CAPACITY (lbs/ft)														
Up to 108	13911	13685	13601	13125	12749	12522	12422	12186	11903	11711	11608	11365	11123	11079	10875
114	13100	12850	12731	12215	11839	11711	11469	11241	11117	10850	10775	10564	10352	10145	
120	12346	12080	11822	11422	11004	10888	10646	10507	10285	10161	9946	9730	9517		
126	11552	11397	11123	10777	10395	10150	10009	9773	9639	9503	9291	9065			
132	11000	10781	10563	10162	9736	9588	9352	9210	9049	8828	8677				
138	10734	10437	10241	9668	9233	9076	8830	8671	8440	8215					
144	10500	10188	9900	9367	8847	8598	8349	8046	7869						
150	10209	9883	9559	8950	8414	8152	7891	7637							
156	9950	9591	9259	8614	7998	7714	7426								
162	9712	9352	8949	8230	7576	7289									
Maximum 168	9566	9123	8753	7948	7264										

1. Transverse and axial combined load capacity is determined with bond and base beam supports. Design of connection details for anchorage of panel to substrate is outside the scope of this report and is to follow the Engineering Design.
2. Transverse and axial combined load capacity are determined for panels only and do not consider the contribution from sheathing materials.
3. Connection details including the connection of wall panels to the underlying structure is outside the scope of this report except where noted in Section 8.1 of this report, and are to be in accordance with the Engineering Design and project specifications.
4. Allowable loads are based off maximum panel capacity for loading conditions shown, with a factor of safety of 3 applied.
5. Axial loads were determined with an eccentricity of t/6 (0.92 inches) from center of panel.

Table 12. Face-Loaded HercuWall® HD Series 8 Panels Allowable Axial and Transverse Combined Loads, 8-inch (203 mm) Stud Spacing with CFC Box Beam

HercuWall® HD - Panel Types S, SW and A – Stud Spacing 12-inches (305 mm)[1,2,3,4,5]															
TRANSVERSE LOAD (psf)	0	7	15	30	37	45	52	60	67	75	82	97	112	120	135
PANEL HEIGHT (inches)	AXIAL CAPACITY (lbs/ft)														
Up to 108	7568	7482	7391	7202	7108	7014	6918	6821	6725	6629	6535	6331	6134	6039	5833
114	7166	7070	6975	6787	6692	6597	6496	6403	6306	6211	6114	5920	5720	5617	
120	6757	6658	6558	6365	6271	6174	6071	5972	5884	5788	5693	5500	5301		
126	6425	6318	6183	5971	5899	5784	5694	5594	5471	5378	5280	5069			
132	6103	5988	5880	5640	5554	5412	5338	5217	5123	5010	4775				
138	5846	5728	5618	5396	5313	5176	5063	4951	4844	4709					
144	5596	5466	5342	5118	5021	4915	4754	4704	4344	4123					
150	5347	5218	5090	4839	4717	4597	4482	4119	3885						
156	5100	4971	4844	4593	4444	4190	3935	3684							
162	4926	4796	4668	4379	4114	3848	3584								
Maximum 168	4877	4747	4626	4161	3884	3333									

1. Transverse and axial combined load capacity is determined with CFC Box Beam and base beam supports. Design of connection details for anchorage of panel to substrate is outside the scope of this report and is to follow the Engineering Design.
2. Transverse and axial combined load capacity are determined for panels only and do not consider the contribution from sheathing materials.
3. Connection details including the connection of wall panels to the underlying structure is outside the scope of this report except where noted in Section 8.1 of this report, and are to be in accordance with the Engineering Design and project specifications.
4. Allowable loads are based off maximum panel capacity for loading conditions shown, with a factor of safety of 3 applied.
5. Axial loads were determined with an eccentricity of t/2.67 (3 inches) from center of panel.

Table 13. HercuWall® HD Series 8 Single Post Allowable Axial and Transverse Combined Loads

HercuWall® HD - Single Post Type S and SW – Post Interconnected with Double ShearStrip® (1 ShearStrip® Each Cavity Face) [1,2,3,4,5]													
TRANSVERSE LOAD (plf)	0	5	10	20	30	40	50	60	70	80	90	100	110
PANEL HEIGHT (inches)	AXIAL CAPACITY (lbs)												
108	12543	12375	12206	11869	11533	11196	10859	10522	10185	9849	9512	9175	8838
14	11230	11103	10977	10724	10472	10219	9967	9714	9461	9209	8956	8704	8451
120	9916	9832	9748	9579	9411	9242	9074	8906	8737	8569	8400	8232	8064
126	8603	8560	8518	8434	8350	8266	8182	8097	8013	7929	7845		
132	7289	7289	7289	7289	7289	7289	7289	7289	7289	7289			
138	7158	7158	7158	7158	7158	7158	7158	7158	7158	7158			
144	7026	7026	7026	7026	7026	7026	7026	7026	7026				
150	6895	6895	6895	6895	6895	6895	6895	6895					
156	6763	6763	6763	6763	6763	6763	6763	6625					
162	6632	6632	6632	6632	6632	6632	6586						
Maximum 168	6500	6500	6500	6500	6500	6500	6115						

1. Transverse and axial combined load capacity is determined with bond and base beam supports. Design of connection details for anchorage of panel to substrate is outside the scope of this report and is to follow the Engineering Design.
2. Transverse and axial combined load capacity are determined for post only and do not consider the contribution from sheathing materials.
3. Connection details including the connection of wall panels to the underlying structure is outside the scope of this report except where noted in Section 8.1 of this report, and are to be in accordance with the Engineering Design and project specifications.
4. Allowable loads are based off maximum panel capacity for loading conditions shown, with a factor of safety of 3 applied.
5. Axial loads were determined with an eccentricity of t/6 (0.92 inches) from center of panel.

Table 14. Face Loaded HercuWall® HD Series 8 Single Post Allowable Axial and Transverse Combined Loads with CFC Box Beam

HercuWall® HD - Single Post Type S and SW – Post Interconnected with Double ShearStrip® (1 ShearStrip® Each Cavity Face) [1,2,3,4,5]																
TRANSVERSE LOAD (plf)	0	7	13	27	40	53	67	80	87	93	100	107	113	120	140	147
PANEL HEIGHT (inches)	AXIAL CAPACITY (lbs)															
108	7349	7328	7278	7178	7079	6980	6882	6785	6736	6685	6633	6581	6528	6476	6320	6266
14	7150	7095	7039	6929	6819	6711	6603	6495	6442	6389	6334	6277	6220	6163	5993	
120	6923	6861	6800	6678	6557	6437	6318	6201	6143	6085	6027	5966	5904	5843		
126	6698	6630	6563	6430	6297	6166	6036	5909	5845	5781	5719	5656	5590	5523		
132	6425	6372	6308	6182	6056	5932	5809	5686	5627	5567	5507	5449	5389			
138	6226	6146	6067	5909	5753	5598	5446	5294	5220	5147	5075	5003				
144	5980	5894	5808	5638	5470	5304	5139	4978	4897	4817	4739					
150	5734	5642	5551	5370	5190	5012	4836	4663	4578	4493						
156	5548	5453	5355	5162	4970	4781	4594	4410	4319							
162	5292	5192	5093	4896	4745	4495	4297	4102								
Maximum 168	4942	4860	4767	4583	4404	4227	4050									

1. Transverse and axial combined load capacity is determined with CFC Box Beam and base beam supports. Design of connection details for anchorage of panel to substrate is outside the scope of this report and is to follow the Engineering Design.
2. Transverse and axial combined load capacity are determined for post only and do not consider the contribution from sheathing materials.
3. Connection details including the connection of wall panels to the underlying structure is outside the scope of this report except where noted in Section 8.1 of this report, and are to be in accordance with the Engineering Design and project specifications.
4. Allowable loads are based off maximum panel capacity for loading conditions shown, with a factor of safety of 3 applied.
5. Axial loads were determined with an eccentricity of t/2.67 (3 inches) from center of panel.

Table 15. HercuWall® HD Series 8 Double Post Allowable Axial and Transverse Combined Loads

HercuWall® HD - Double Post / T Post Type S and SW – Post Interconnected with Double ShearStrip® (2 ShearStrip® Each Cavity Face) [1,2,3,4,5]													
TRANSVERSE LOAD (plf)	0	5	10	20	30	40	50	60	70	80	90	100	110
PANEL HEIGHT (inches)	AXIAL CAPACITY (lbs)												
108	17154	17038	16923	16691	16460	16228	15997	15766	15534	15303	15071	14840	14609
114	16227	16129	16031	15836	15641	15445	15250	15055	14860	14664	14469	14274	14078
120	15300	15220	15140	14981	14822	14663	14503	14344	14185	14026	13866	13707	13548
126	14372	14311	14249	14126	14003	13880	13756	13633	13510	13445	13445	13445	13445
132	13445	13445	13445	13445	13445	13445	13445	13445	13445	13445	13445	13445	13445
138	12981	12981	12981	12981	12981	12981	12981	12981	12981	12981	12981	12981	12981
144	12517	12517	12517	12517	12517	12517	12517	12517	12517	12517	12517	12517	12517
150	12053	12053	12053	12053	12053	12053	12053	12053	12053	12053	12053	12053	12053
156	11589	11589	11589	11589	11589	11589	11589	11589	11589	11589	11589	11589	11589
162	11125	11125	11125	11125	11125	11125	11125	11125	11125	11125	11125	11125	11125
Maximum 168	10661	10661	10661	10661	10661	10661	10661	10661	10661	10661	10661	10661	

1. Transverse and axial combined load capacity is determined with bond and base beam supports. Design of connection details for anchorage of panel to substrate is outside the scope of this report and is to follow the Engineering Design.
2. Transverse and axial combined load capacity are determined for post only and do not consider the contribution from sheathing materials.
3. Connection details including the connection of wall panels to the underlying structure is outside the scope of this report except where noted in Section 8.1 of this report, and are to be in accordance with the Engineering Design and project specifications.
4. Allowable loads are based off maximum panel capacity for loading conditions shown, with a factor of safety of 3 applied.
5. Axial loads were determined with an eccentricity of t/6 (0.92 inches) from center of panel.

Table 16. Face-Loaded HercuWall® HD Series 8 Double Post Allowable Axial and Transverse Combined Loads with CFC Box Beam

HercuWall® HD - Double Post / T Post Type S and SW – Post Interconnected with Double ShearStrip® (2 ShearStrip® Each Cavity Face) [1,2,3,4,5]																
TRANSVERSE LOAD (plf)	0	7	13	27	40	53	67	80	87	93	100	107	113	120	140	147
PANEL HEIGHT (inches)	AXIAL CAPACITY (lbs)															
Up to 108	14712	14652	14593	14473	14351	14228	14105	13980	13918	13859	13798	13736	13674	13614	13422	13356
14	14264	14196	14128	13991	13855	13720	13580	13434	13362	13290	13217	13145	13073	13000	12782	12709
120	13811	13737	13657	13496	13336	13176	13017	12858	12778	12698	12618	12538	12459	12379	12139	12059
126	13339	13251	13164	12989	12814	12640	12466	12291	12204	12117	12030	11941	11851	11761	11494	11404
132	12809	12777	12682	12491	12302	12111	11919	11725	11626	11528	11432	11334	11238	11142	10852	10755
138	12388	12291	12193	11994	11794	11596	11396	11197	11099	11000	10903	10802	10702	10605	10307	
144	12151	12047	11945	11736	11533	11322	11120	10916	10811	10706	10607	10505	10403	10295	9976	
150	11744	11642	11542	11340	11138	10936	10731	10528	10426	10324	10219	10080	9924	9754	9223	
156	11540	11441	11337	11136	10932	10726	10520	10251	10076	9888	9698	9509	9323	9137		
162	11399	11305	11210	11018	10819	10485	10094	9694	9491	9290	9092	8894	8697	8498		
Maximum 168	11324	11215	11106	10879	10493	10072	9634	9200	8980	8765	8551	8332	8108	7881		

1. Transverse and axial combined load capacity is determined with CFC Box Beam and base beam supports. Design of connection details for anchorage of panel to substrate is outside the scope of this report and is to follow the Engineering Design.
2. Transverse and axial combined load capacity are determined for post only and do not consider the contribution from sheathing materials.
3. Connection details including the connection of wall panels to the underlying structure is outside the scope of this report except where noted in Section 8.1 of this report, and are to be in accordance with the Engineering Design and project specifications.
4. Allowable loads are based off maximum panel capacity for loading conditions shown, with a factor of safety of 3 applied.
5. Axial loads were determined with an eccentricity of t/2.67 (3 inches) from center of panel.

Table 17. HercuWall® HD Series 8 Header and Sill Allowable Transverse Loads

HercuWall® HD - Series 8 Header and Sill Allowable Transverse Loads[1,2,3] Panel Types S, SW and A	
LENGTH (inches)	**ALLOWABLE TRANSVERSE LOAD (plf)**
108	142
114	119
120	104
126	91
132	81
138	72
144	64
150	58
156	52
162	47
168	42

1. Allowable loads are based off maximum header and sill capacity for loading conditions shown, with a factor of safety of 3 applied.
2. Engineering Design is to consider tributary width of the header and sill for determination of transverse load.
3. Header and sill are required reinforced with interior and exterior oriented ShearStrip® steel elements.

Table 18. Impact Resistant HercuWall® HD Series 8 Allowable Design Pressures - High Velocity Hurricane Zones (FBC)

HercuWall® HD - Series 8 HVHZ Wind Resistance Design Pressure (FBC) Panel Types S, SW and A – Stud Spacing 12-inches (305 mm)[1,2,3,4]	
PANEL HEIGHT (inches)	DESIGN PRESSURE (psf)
108	215
114	192
120	176
126	161
132	150
138	143
144	139
150	135
156	132
162	128
168	125

1. Design Pressure is determined with bond and base beam supports. Design of connection details for anchorage of panel to substrate is outside the scope of this report and is to follow the Engineering Design.
2. Design Pressure is determined for panels only and does not consider the contribution from sheathing materials.
3. Connection details including the connection of wall panels to the underlying structure is outside the scope of this report except where noted in Tables 9, 10 and 11, and are to be in accordance with the Engineering Design and project specifications.
4. Allowable loads are based off maximum panel capacity for loading conditions shown, with a factor of safety of 1.5 applied based on evaluation to TAS 202, TAS 201, TAS 203.

Table 19. Impact Resistant HercuWall® HD Series 8 - Allowable Axial Capacities High Velocity Hurricane Zones (FBC)

HercuWall® HD - Series 8 Axial Capacity – Florida Building Code (FBC) Panel Types S, SW and A – Stud Spacing 12'' (305 mm)[1,2,3,4,5]	
PANEL HEIGHT (inches)	AXIAL CAPACITY (plf)
108	9274
114	8733
120	8230
126	7702
132	7333
138	7156
144	7000
150	6806
156	6633
162	6475
168	6378

1. Axial load capacity is determined with bond and base beam supports. Design of connection details for anchorage of panel to substrate is outside the scope of this report and is to follow the Engineering Design.
2. Axial load capacity is determined for panels only and does not consider the contribution from sheathing materials.
3. Connection details including the connection of wall panels to the underlying structure is outside the scope of this report except where noted in Tables 9, 10 and 11, and are to be in accordance with the Engineering Design and project specifications.
4. Allowable loads are based off maximum panel capacity for loading conditions shown, with a factor of safety of 3 applied.
5. Axial loads were determined with an eccentricity of t/6 (0.92 inches) from center of panel.

Table 20. HercuWall® and HercuWall® HD Series 8 Bond Beam Acting as Lintel - Allowable Uniform Gravity and Uplift Loads

LINTEL, TYPE S AND SW						
LINTEL PROFILE	3" x 7.5" (7-A)		3" x 11.5" (7-B)		3" x 13.5" (7-C)	
SPAN (feet)	ALLOWABLE SERVICE LOAD - ASD (plf)					
	LOADING FORCE DIRECTION					
	GRAVITY	UPLIFT	GRAVITY	UPLIFT	GRAVITY	UPLIFT
3	1347	169	2807	1231	3103	1687
3.5	1068	159	2231	1055	2473	1446
4	859	104	1798	854	2001	1199
4.5	696	83	1462	636	1634	1007
5	566	66	1193	516	1340	854
5.5	459	52	973	419	1100	728
6	371	40	790	338	900	624
6.5	329	-	705	312	811	535
7	293	-	631	277	735	473
7.5	262	-	568	246	669	420
8	234	-	513	220	611	373
8.5	210	-	464	196	560	332
9	189	-	420	176	515	295
9.5	170	-	381	157	475	262
10	153	-	346	140	438	232
10.5	139	-	317	125	403	205
11	127	-	291	110	371	183
11.5	116	-	267	101	342	179
12	105	-	245	92	316	164
12.5	-	-	225	84	291	151
13	-	-	206	77	269	138
13.5	-	-	189	70	248	127
14	-	-	173	64	228	116
14.5	-	-	-	-	210	106
15	-	-	-	-	193	97
15.5	-	-	-	-	178	88
16	-	-	-	-	163	80

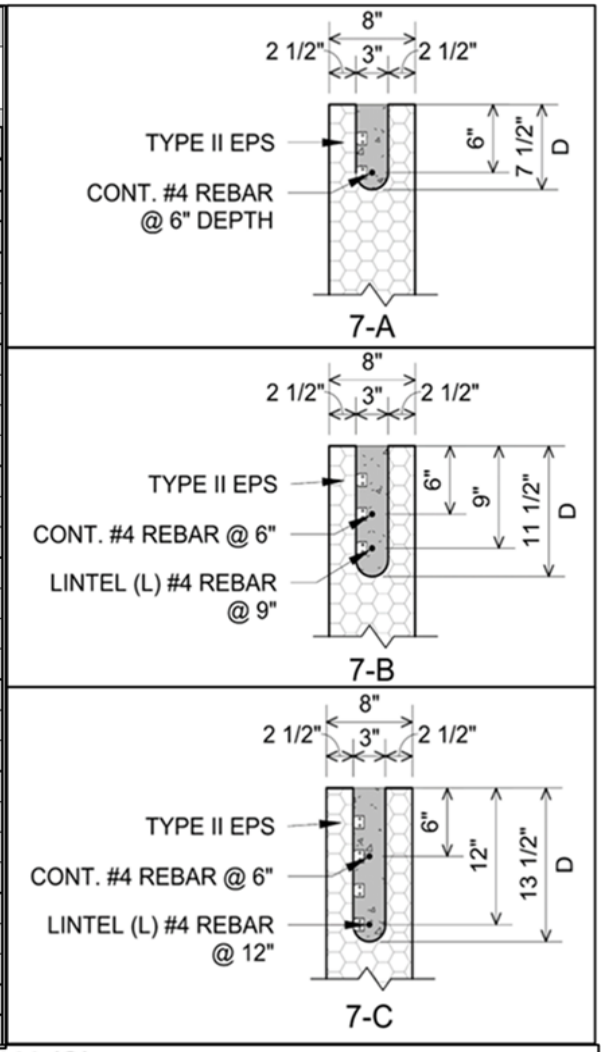

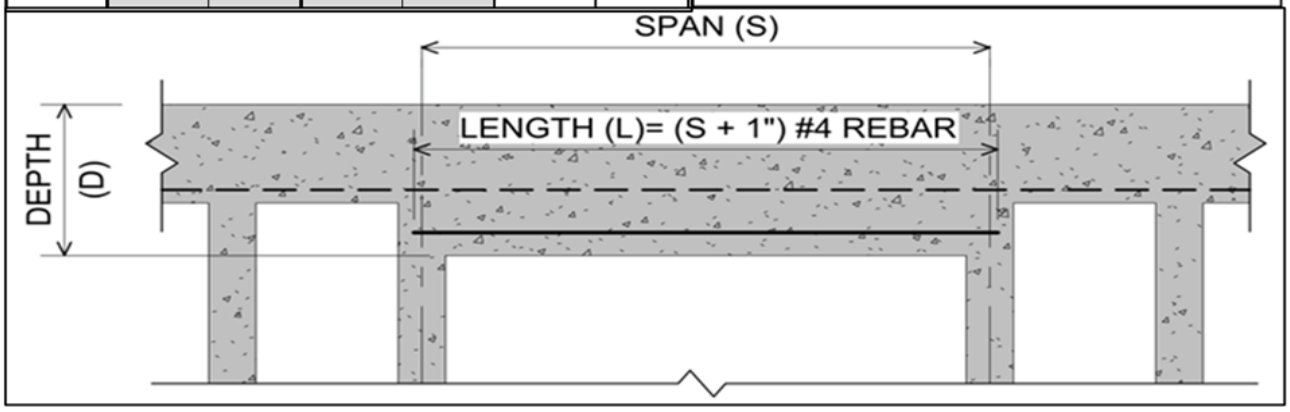

1. Allowable loads are based off maximum capacity for loading conditions shown, with a factor of safety of 3 applied.
2. Jamb post is required to be reinforced with 1 pair of ShearStrip® oriented from interior to exterior.
3. Spans not outlined in Table 7 can be specified in Engineering Design when following ACI 318.

Table 21. HercuWall® and HercuWall® HD - SD Lintel - Allowable Uniform Gravity Uplift and Lateral Loads

HD LINTEL									
LINTEL PROFILE	5" x 7.5" (8-A)			5" x 10.5" (8-B)			5" x 13.5" (8-C)		
SPAN (feet)	ALLOWABLE SERVICE LOAD - ASD (plf)								
	GRAVITY	UPLIFT	LATERAL	GRAVITY	UPLIFT	LATERAL	GRAVITY	UPLIFT	LATERAL
4.0	1950	1317	710	2929	2194	719			
4.5	1721	1170	626	2522	1951	636			
5.0	1466	1046	559	2165	1756	569	2372	2458	593
5.5	1258	958	504	1872	1596	514	2101	2234	539
6.0	1085	878	458	1628	1463	469	1876	2048	494
6.5	938	774	419	1422	1350	430	1685	1891	456
7.0	813	667	386	1245	1254	397	1521	1756	424
7.5	704	581	357	1092	1170	368	1380	1639	395
8.0	686	511	332	957	1097	343	1256	1536	371
8.5	668	432	304	862	991	317	1146	1446	349
9.0	651	364	279	857	884	294	1049	1364	329
9.5	583	310	256	851	793	273	962	1224	312
10.0	522	266	236	845	716	255	884	1105	296
10.5	467	229	218	763	649	238	812	1002	268
11.0	407	200	201	689	592	222	747	913	245
11.5	334	175	186	621	541	208	688	835	224
12.0	268	154	172	558	494	195	634	767	206
12.5	241	136	162	515	437	185	584	707	189
13.0	215	121	153	475	388	175	538	654	175
13.5	191	108	145	438	347	162	495	606	162
14.0	169	97	137	404	311	151	455	564	151
14.5	149	87	130	362	280	141	418	525	141
15.0	130	79	123	321	253	132	384	491	132
15.5	112	71	111	285	229	123	356	460	123
16.0	95	65	103	253	208	116	354	432	116
16.5							352	403	109
17.0							350	368	102
17.5							347	338	97
18.0							320	310	90
18.5							294	286	82

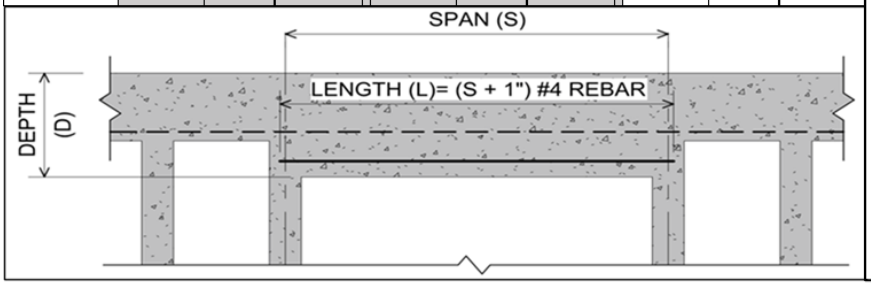

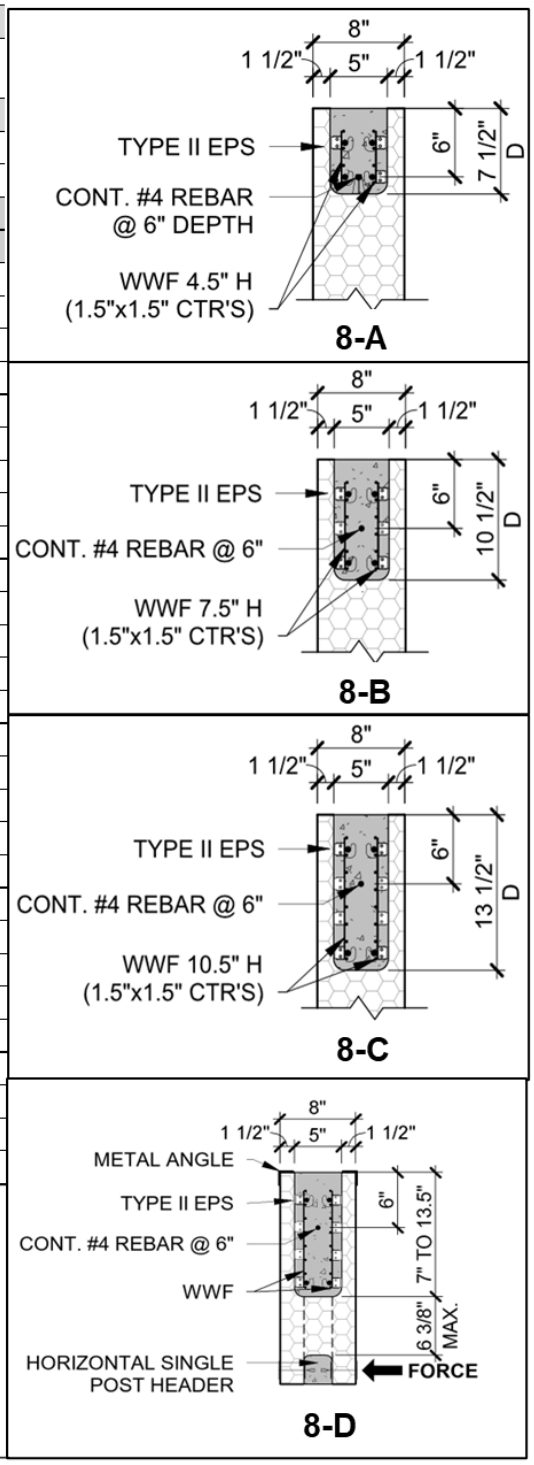

1. Allowable loads are based off maximum capacity for loading conditions shown, with a factor of safety of 3 applied.
2. Jamb post is required to be reinforced with 1 pair of ShearStrip® oriented from interior to exterior.
3. Spans not outlined in Table 8 can be specified in Engineering Design when following ACI 318.
4. For lateral loading, force was applied to the low header, not the SD Lintel. See reference drawing 8-D

Table 22. HercuWall® and HercuWall® HD Series 8 Panels - Allowable In-Plane Racking Shear Loading

HercuWall® and HercuWall® HD Series 8 In-plane Racking Shear Resistance (Seismic Categories A and B Only) Panel Types S, SW and A – Stud Spacing 12-inches (305 mm)[1,2,3,4]					
Panel Height (inches)	**Concrete Length (inches)**		**Concrete Length (inches)**		OVERTURNING ANCHORAGE
	63	75	63	75	
	Allowable In-Plane Shear Capacity (plf)		**Allowable Overturning Net Tension (lbs)**		
96 or less	301	390	2408	3120	"#4 rebar dowels protruding from the foundation and embedded 24 inches into wall panel at the center of the vertical stud at panel ends. See Figure 14 for details of installation.
108	271	351	2439	3159	
114	258	334	2451	3173	
120	247	318	2470	3180	
126	238	304	2499	3192	
132	226	291	2486	3201	
138	219	279	2519	3209	
144	209	268	2508	3216	

HercuWall® and HercuWall® HD Series 8 Reinforced In-plane Racking Shear Resistance (Seismic Categories A & B Only) Panel Types S, SW and A – Stud Spacing 12-inches (305 mm)[1,2,3,4]							
Panel Height (inches)	**Concrete Length (inches)**			**Concrete Length (inches)**			OVERTURNING ANCHORAGE
	27	39	63	27	39	63	
	Allowable In-Plane Shear Capacity (plf)			**Allowable Overturning Net Tension (lbs)**			
96 or less	508	646	337	4064	5168	2696	#4 rebar dowels protruding from the foundation and embedded 24 inches into wall panel at the center of the vertical stud at panel ends. See Figure 15 for details of installation.
108	446	585	304	4014	5265	2736	
114	423	545	288	4019	5178	2736	
120	399	529	276	3990	5290	2760	
126	380	499	263	3990	5240	2762	
132	348	486	253	3828	5346	2783	
138	327	466	242	3761	5359	2783	
144	312	448	233	3744	5376	2796	

1. Panel width is dimensions from outside stud to outside stud (ie minus the EPS) for the purpose of calculating shear capacities.
2. Allowable loads are based off maximum HercuWall® capacity for loading conditions shown, with a factor of safety of 3 applied.
3. ShearStrip® standard installation of alternating between vertical studs was used in determination of the above values. Additional ShearStrip® reinforcing can be included in the assembly, without detracting from the above allowable racking shear values.
4. Connection details for anchoring of dowels and bolts into underlying structure to resist loads transferred by HercuWall® panels is outside the scope of this report and is to follow ACI 318 and the Engineering Design.

HercuWall® and HercuWall® HD Series 8 Reinforced In-plane Racking Shear Resistance (Seismic Categories A & B Only) Panel Types S, SW and A – Stud Spacing 12-inches (305 mm) With End Posts[1,2,3,4]									
PANEL HEIGHT (inches)	CONCRETE LENGTH (inches)				CONCRETE LENGTH (inches)				OVERTURNING ANCHORAGE
	12	27	39	75	12	27	39	75	
	ALLOWABLE IN-PLANE SHEAR CAPACITY (plf)				ALLOWABLE OVERTURNING NET TENSION (lbs)				
108 or less	461	552	591	369	4153	4964	5317	3323	#4 rebar dowels protruding from the foundation and embedded 24 inches into wall panel at the center of the vertical single post at panel ends, with additional reinforcement from base of wall to top of wall at bond beam. See Figure 16 for details of installation.
114	447	541	583	351	4244	5138	5535	3339	
120	435	530	576	335	4349	5296	5756	3354	
126	422	512	567	321	4429	5378	5954	3368	
132	411	504	554	306	4524	5549	6096	3362	
138	399	493	545	295	4584	5672	6264	3388	
144	385	481	535	282	4624	5776	6422	3384	

1. Concrete length is the dimension from outside post to outside post (ie minus the EPS) for the purpose of calculating shear capacities.
2. Allowable loads are based off maximum HercuWall® capacity for loading conditions shown, with a factor of safety of 3 applied.
3. ShearStrip® standard installation of alternating between vertical studs and a single pair of opposing ShearStrip® for the end posts were used in determination of the above values. Additional ShearStrip® reinforcing can be included in the assembly, without detracting from the above allowable racking shear values.
4. Connection details for anchoring of dowels and bolts into underlying structure to resist loads transferred by HercuWall® panels is outside the scope of this report and is to follow ACI 318 and the Engineering Design.

Table 23. HercuWall® and HercuWall® HD Series 8 Solid Shear Panels - Allowable In-Plane Racking Shear Loading

HercuWall® and HercuWall® HD Series 8 Solid Shear Panel In-Plane Racking Shear Resistance (Seismic Categories A and B Only) Panel Types S and SW[1,2,3,4]			
Panel Height (inches)	Concrete Length (inches)	Concrete Length (inches)	Overturning Anchorage
	20	20	
	Allowable In-Plate Shear Capacity (plf)	Allowable Overturning Net Tension (lbs)	
96 or less	609	4872	#4 rebar dowels protruding from the foundation and embedded 24 inches into wall panel at each end of the solid concrete section. See Figure 17 for details of installation.
108	551	4959	
114	522	4959	
120	494	4940	

HercuWall® and HercuWall® HD Series 8 Reinforced Solid Shear Panel In-Plane Racking Shear Resistance (Seismic Categories A and B Only) Panel Types S and SW[1,2,3,4]									
Panel Height (inches)	Concrete Length (inches)				Concrete Length (inches)				Overturning Anchorage
	18	24	27	36	18	24	27	36	
	Allowable In-Plate Shear Capacity (plf)				Allowable Overturning Net Tension (lbs)				
96 or less	629	705	684	795	5032	5640	5472	6360	#4 rebar dowels protruding from the foundation and embedded 24 inches into the wall panel at each end of the solid concrete section, with additional reinforcement from base of wall to the bond beam. See Figure 18 for details of installation.
108	580	629	612	711	5220	5661	5508	6399	
114	549	596	580	669	5216	5662	5510	6356	
120	523	569	555	637	5230	5690	5550	6370	
126	498	526	527	612	5229	5523	5534	6426	
132	476	518	504	589	5236	5698	5544	6479	
138	456	495	483	564	5244	5693	5555	6486	
144	443	463	464	536	5316	5556	5568	6432	

1. Panel width is the length of solid concrete core section (ie minus the EPS) for the purpose of calculating shear capacities.
2. Allowable loads are based off maximum HercuWall® capacity for loading conditions shown, with a factor of safety of 3 applied.
3. ShearStrip® standard installation of alternating between vertical studs was used in determination of the above values. Additional ShearStrip® reinforcing can be included in the assembly, without detracting from the above allowable racking shear values.
4. Connection details for anchoring of dowels and bolts into underlying structure to resist loads transferred by HercuWall® panels is outside the scope of this report and is to follow ACI 318 and the Engineering Design.

Table 24. HercuWall® and HercuWall® HD Series 8 - Allowable Connection Capacities at Bottom of Wall

HercuWall® and HercuWall® HD Bottom of Wall Allowable Connection Loads (lbs.)[1,2,4]				
Connection Methods and Hardware	Load Directions [3,7]			Reference Figure No.
	Uplift	F1	F2	
½" (#4) Rebar Dowel @ Min 3" Embed	453	1127	323	2A
½" Ø ATR w/Nuts and Washer @ Min 3" Embed	751	1214	290	2B
½" Ø J-Bolt w/Nut @ Min 3" Embed[6]	751	1150 (540)[5]	290	2C

1. Allowable loads are based on a safety factor of 3.0 applied to the ultimate load determined from testing.
2. Loads shown are governed by concrete failure, unless noted otherwise.
3. For combined loading, the connector must satisfy the unity equation: Demand/Capacity Ratio (one direction) + Demand/Capacity Ratio (other direction) ≤ 1.0.
4. Connection to other materials (wood, steel, etc.) shall be evaluated separately.
5. Value for end of beam condition (minimum 6 inches) .
6. Load values for J-Bolt are calculated per IBC, Chapter 19 which refers to ACI 318-19.
7. See Figure 2D for direction of application of load.

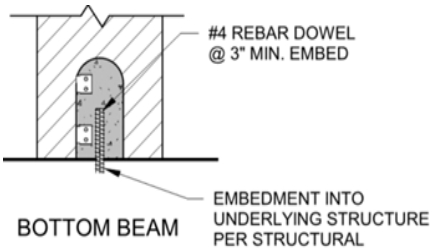

Figure 2a – Rebar Dowel

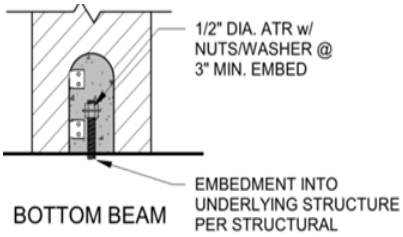

Figure 2b – All Thread Rod

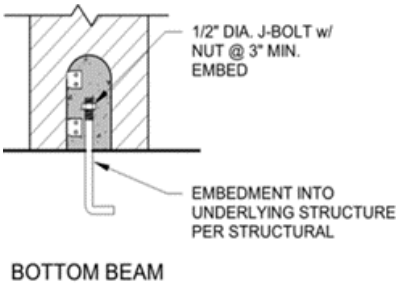

Figure 2c -J Bolt

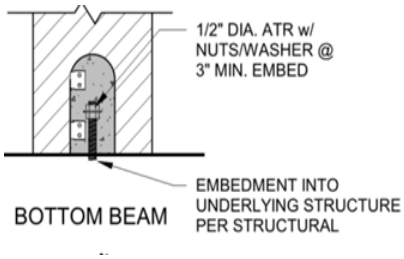

Figure 2d – ½'' Diameter Nut Washer with 3'' Embed

Figure 2. HercuWall® and HercuWall® HD Series 8 Bottom of Beam Connection Details

Table 25. HercuWall® and HercuWall® HD Series 8 - Allowable Connection Capacities at Member Perpendicular to Wall

Truss to HercuWall® and HercuWall® HD Connection Shear Capacity - Members Perpendicular to Wall[1,2]				
Connection	Allowable Connection Capacities (lbs.)			
	F1	F2(+)	F2(-)	UPLIFT
HercuWall® Saddle Bracket with (8)10D X 1-1/2" (38 mm) nails at Bottom Chord	230	278	429	442
HercuWall® Embed with (4) #9 X 2-1/2" (64 mm) Wood Screws at Top Chord	599	503	562	423

1. Allowable loads are based on maximum tested HercuWall® Connection capacity for loading conditions shown with a factor of safety of 3 applied.
2. See Figure 3A for Connection Loading Diagram.

Table 26. HercuWall® and HercuWall® HD Series 8 - Top of Wall Connection Capacities at Member Parallel to Wall

HercuWall® and HercuWall® HD Top of Wall Connections – Members Parallel to the Wall [5,6]				
Connection		Allowable Connection Capacities (lbs.)		
		F1	F2	UPLIFT
1/2" (13 mm) Dia. X 6" (152 mm) ATR with Nuts and Washers at 3" (75 mm) Min. Embed	Bottom Chord Connection	1214	289	751
1/2" (13 mm) Dia. X 7" (178 mm) ATR with Epoxy at 4" (102 mm) Min. Embed [1, 4]		1288	394	799
5/8" (16 mm) Dia. X 9" (229 mm) ATR with PL3/16 x 2 x 2 at 6.5" (165 mm) Min. Embed [2]		2144	320	1453
1/2" (13 mm) Dia. X 5" (127 mm) Concrete Bolt With 3-1/2" (89 mm) Min. Embed[3,4]		1522	375	565
1/2" (13 mm) Dia. X 6" (152 mm) J-Bolt at 4" (75 mm) Min. Embed		1020	344	630
HercuWall® Embed with (4) #9 X 2-1/2" (64 mm) Wood Screws	Top Chord Connection	548	532	423

1. Epoxy must be slow cure and code listed as an alternative to cast-in-place reinforcing bars governed by ACI 318 and IBC Chapter 19.
2. 3/16" (4.8 mm) x 2" (51 mm) x 2" (51 mm) bearing plate minimum steel specification, ASTM A36; ASTM A-1011 Grade 33.
3. Screw anchor manufactured from heat-treated steel complying with SAE J403 Grade 10B21.
4. 1/2" (13 mm) Ø x 7" (178 mm) J-Bolt at 4" (102 mm) min. embedment allowed as alternate anchor.
5. Allowable loads are based on maximum tested HercuWall® connection capacity for loading conditions shown with a factor of safety of 3 applied.
6. See Figure 3A for Load Diagram for HercuWall Embed connection.

Table 27. Ledger Bolt into face of HercuWall® HD Series 8 CFC Box Beam- Allowable Bolt Capacities

HercuWall® HD Connection Capacity – Ledger Bolt With CFC Box Beam[1,2,3]			
Connection[1,2,3,4,5,6,7]	Allowable Connection Capacities (lbs.)[5,6]		
	Downward (Shear)	Uplift (Shear)	Pullout (Tension)
1/2" (13 mm) Dia. X 8" (203 mm) J-Bolt at 5" (127 mm) Min. Effective Embed	2163	2238	3326

1. The bolt is to be located at mid-depth of the CFC bond beam. Max Tolerance is to be +-3/4" (19 mm)
2. The spacing of the bolts is to be minimum 12" (305 mm) O.C. For spacing less than 12" (305 mm), calculate capacities using ACI.
3. J-bolt may be replaced by headed stud or threaded rod with nut with 5" (127 mm) embed to the inner face of head/nut.
4. See Figure 3B for Connection Loading Diagram.
5. Allowable loads are based on average of tested values with a factor of safety of 3 applied.
6. This table represents capacity of bolts only. Considerations for connection of members to the HercuWall HD system should be made to calculate the overall capacity of the ledger connection.
7. Connection capacities are for use with Tables 10, 12, 14, and 16 of this report only

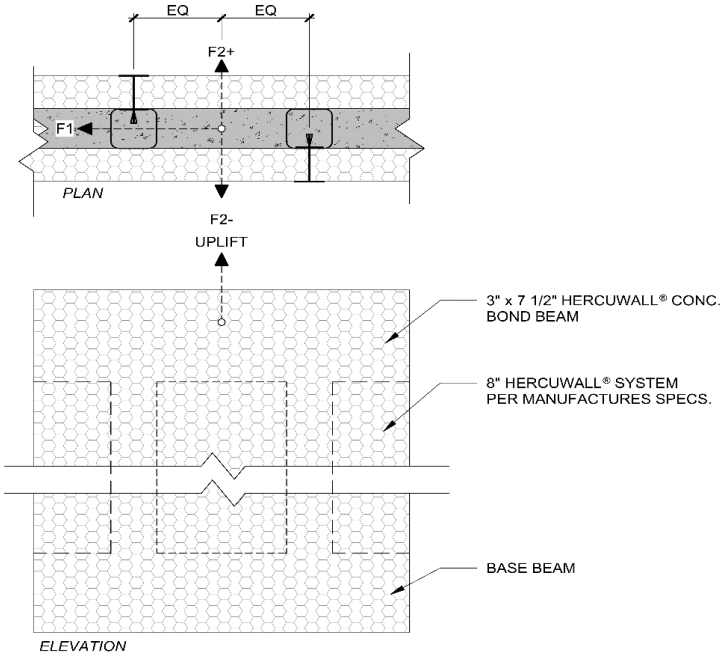

Figure 3A. Load Diagram Truss Saddle Bracket and Embedded Connections

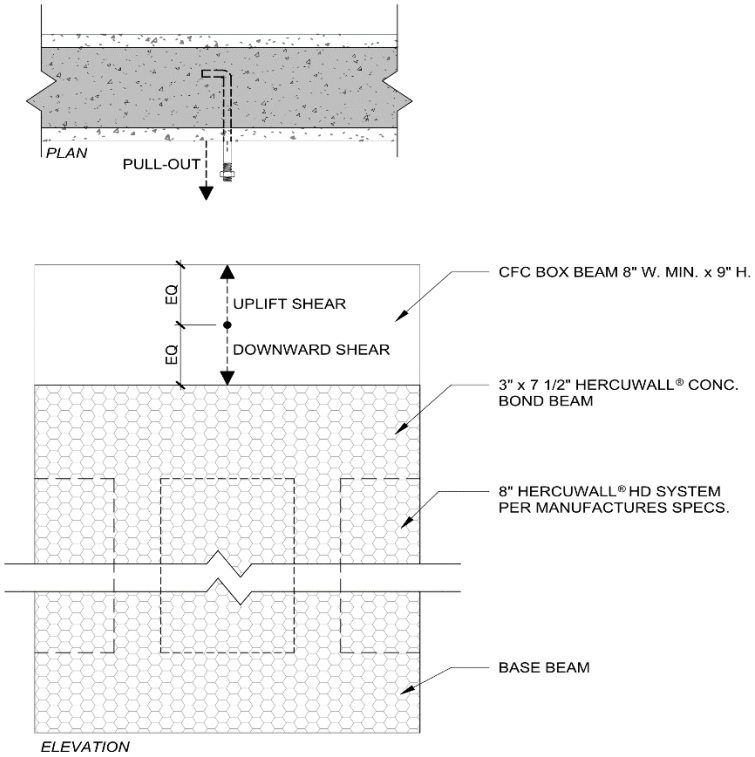

Figure 4B. Load Diagram Ledger Bolt Connections

Table 28. HercuWall® Series 8 - Individual Stud/Post Tension and Uplift Capacities

HercuWall® and HercuWall® HD Series 8 Stud/Post Tension Capacity[1,2,4,5]				
Description	Dimensions (in.)		Vertical Rebar Reinforcement	Allowable Tension Capacity (lbs.)
	Width	Depth		
Stud (Unreinforced)	3	3	NONE	1262
Stud (Reinforced)	3	3	(1) #4[3]	4596
Single Post (Unreinforced)	3	3	NONE	3633
Single Post (Reinforced)	3	3	(1) #4[3]	5248
Double Post (Unreinforced)	6	3	NONE	4618
Double Post (Reinforced)	6	3	(1) #4[3]	4875
Double T Post (Unreinforced)	7	3	NONE	5424
Double T Post (Reinforced)	7	3	(1) #4[3]	5824

1. Concrete shall have a compressive Strength of f'c = 4000 psi.
2. Allowable loads are based on a safety factor of 3.0 applied to the ultimate load determined from testing.
3. Vertical rebar shall extend from bottom of wall to bond beam and be bent 90 degrees to form a 48-bar dia. Lap splice with bond beam horizontal continuous #4 rebar.
4. For locations requiring fully developed allowable uplift loads equal to the tabulated allowable tension loads, a single #4 rebar dowel must be installed, protruding 24" from slab/supporting member and extending into the stud/post.
5. Design of connection details for anchorage of studs/posts to substrate is outside the scope of this report and is to follow the Engineering Design.

8.2 HercuWall® and HercuWall® HD Series 8 Panel and Installation Details:

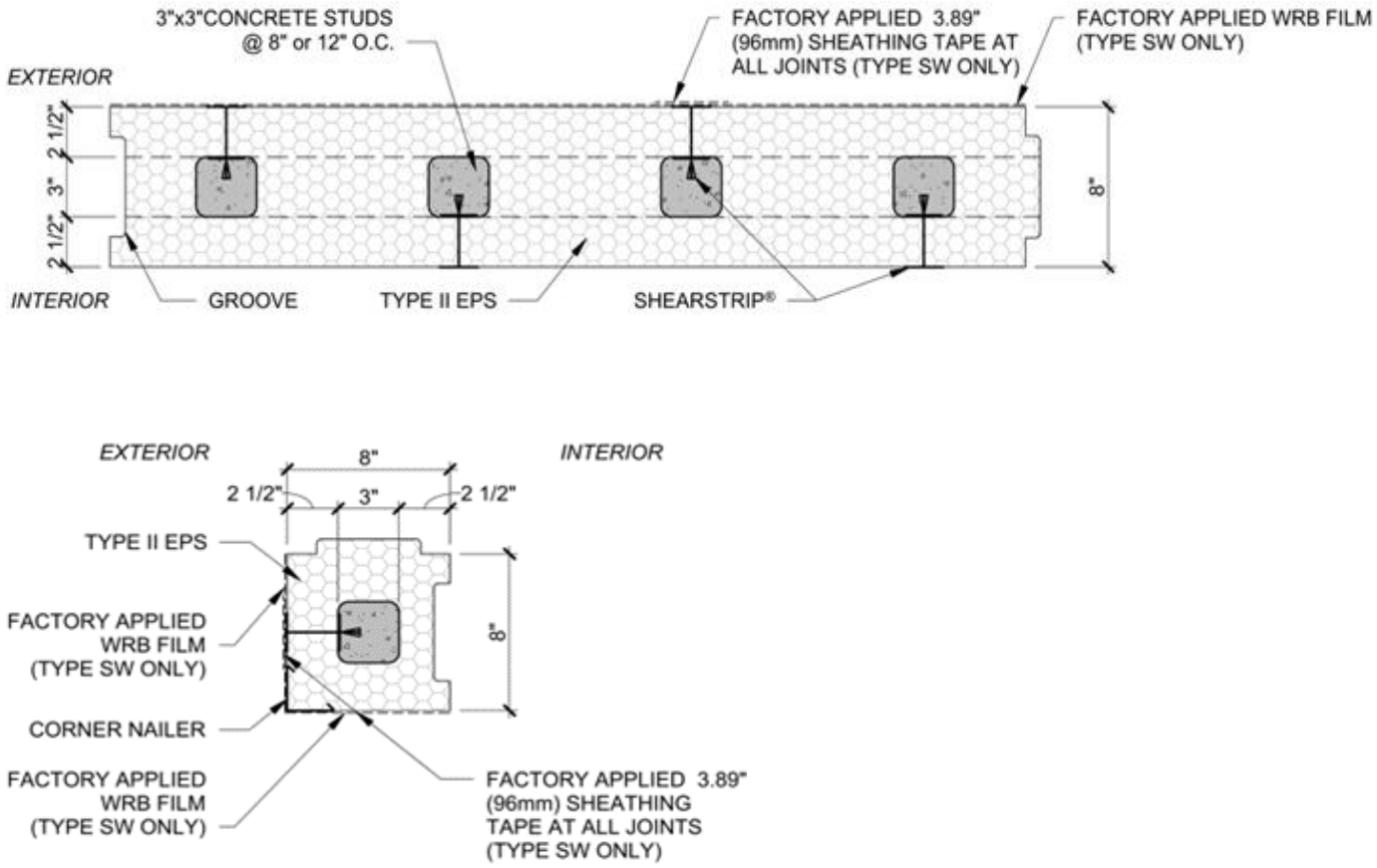

Figure 5. HercuWall® and HercuWall® HD Series 8 Type S and SW Panel and Corner Details

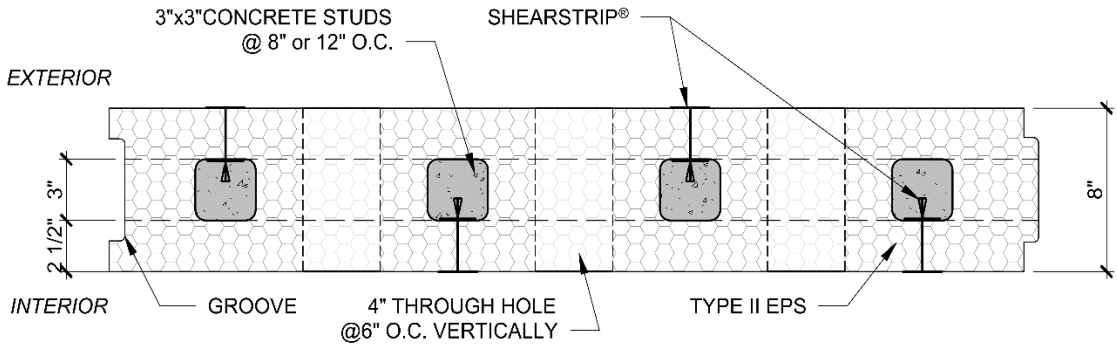

Figure 6. HercuWall® and HercuWall® HD Series 8 Type A Panel Details

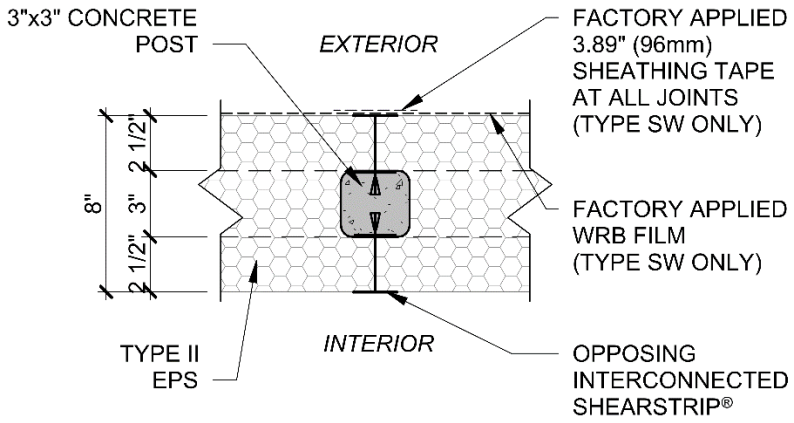

Figure 7. HercuWall® and HercuWall® HD Series 8 Type S, SW, and A Single Post Details

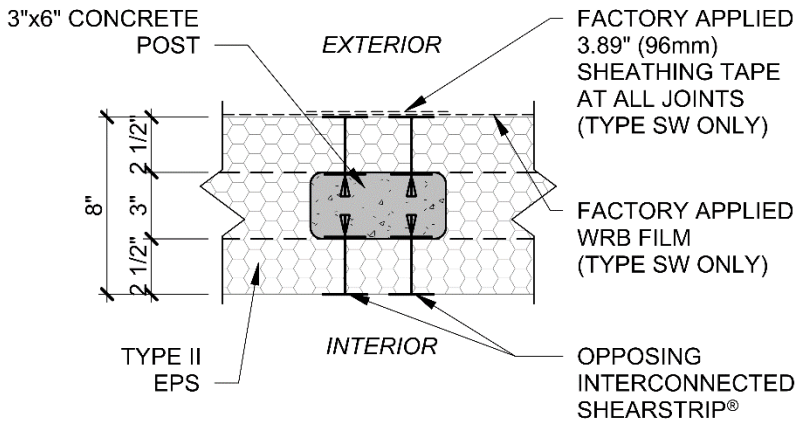

Figure 8. HercuWall® and HercuWall® HD Series 8 Type S, SW, and A Double Post Details

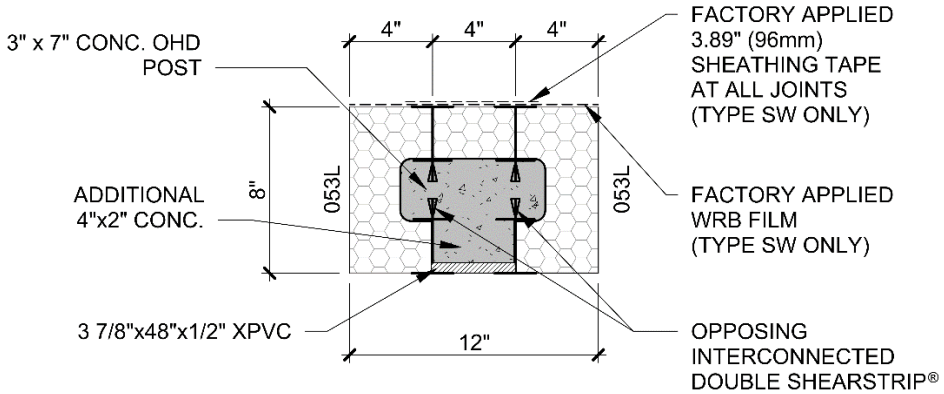

Figure 9. HercuWall® and HercuWall® HD Series 8 Type S, SW, and A Double "T" Post Details

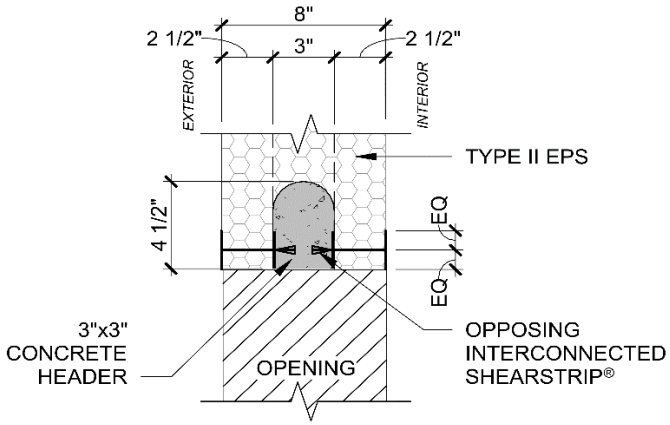

HEADER
9-A

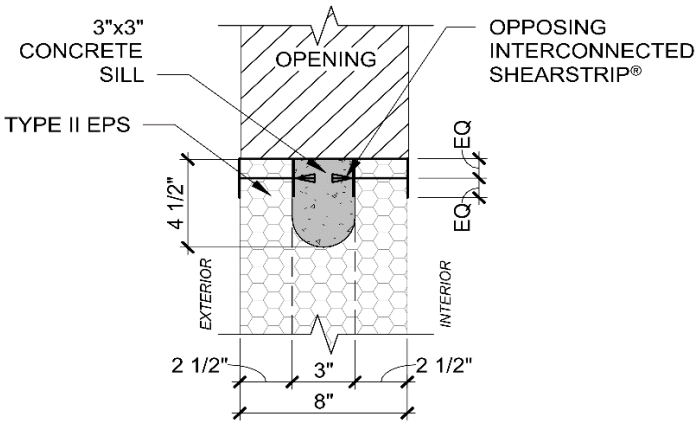

SILL
9-B

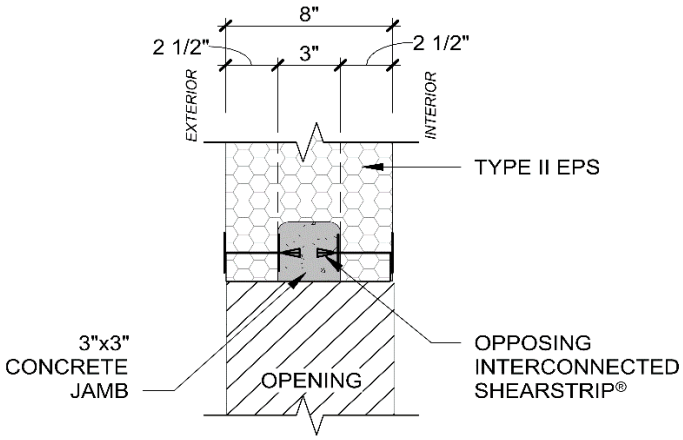

JAMB
9-C

Figure 9 – HercuWall® and HercuWall® HD Series 8 Header, Sill and Jamb Sections

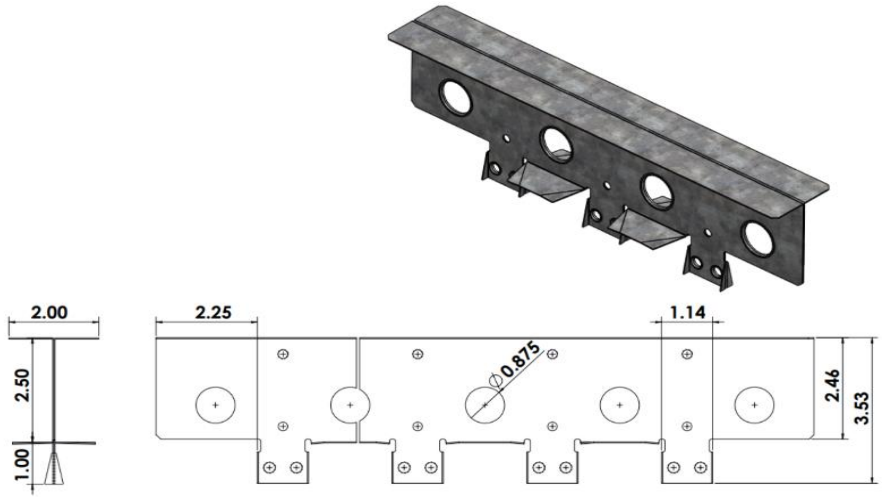

Figure 10 - HercuWall® and HercuWall® HD ShearStrip

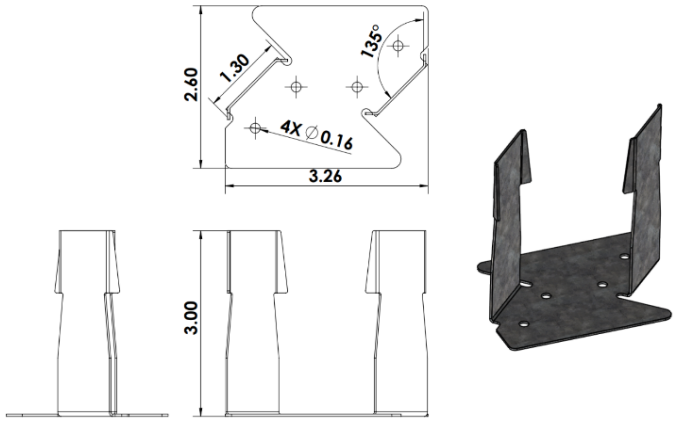

Figure 11 - HercuWall® and HercuWall® HD Embed

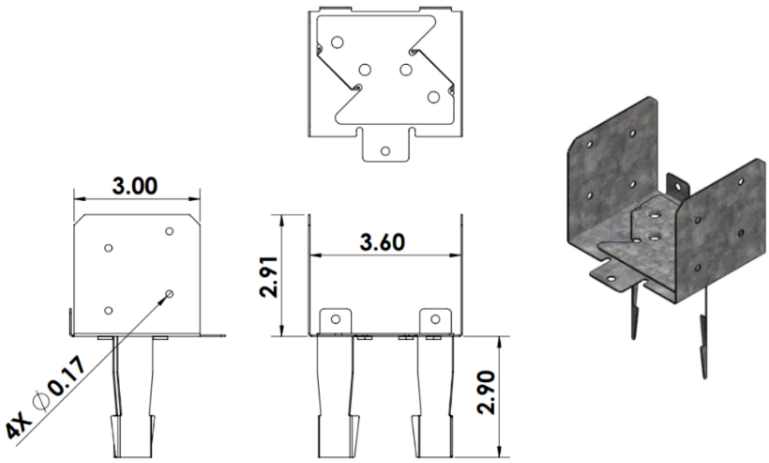

Figure 12 - HercuWall® and HercuWall® HD Truss Saddle Bracket

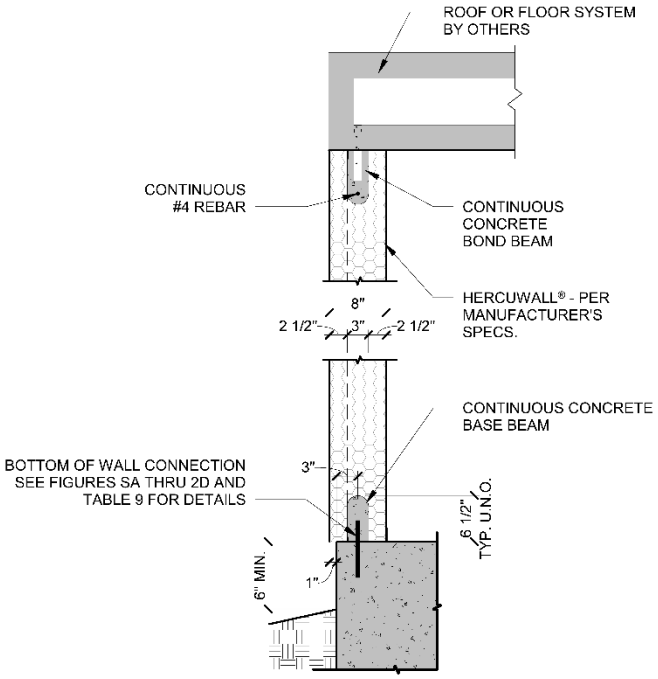

Figure 13 – Typical Wall Section

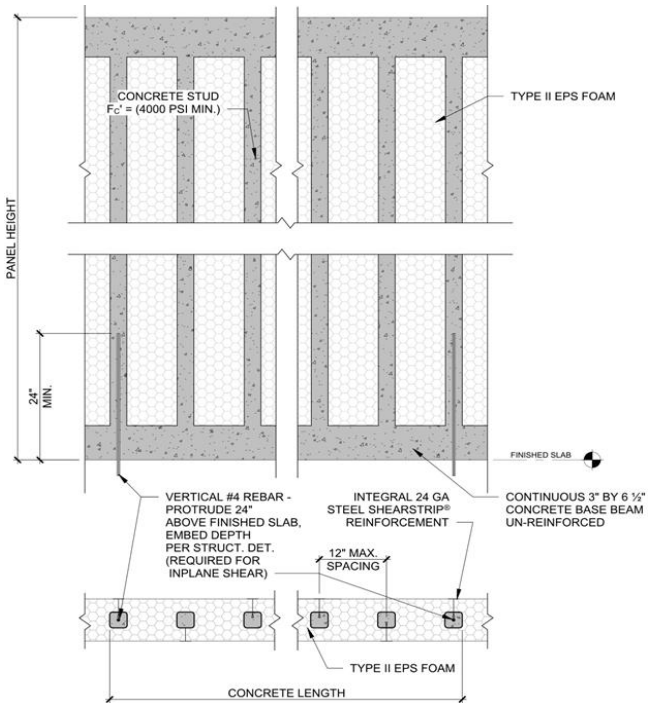

Figure 14 – Typical Unreinforced Wall Section and Elevation

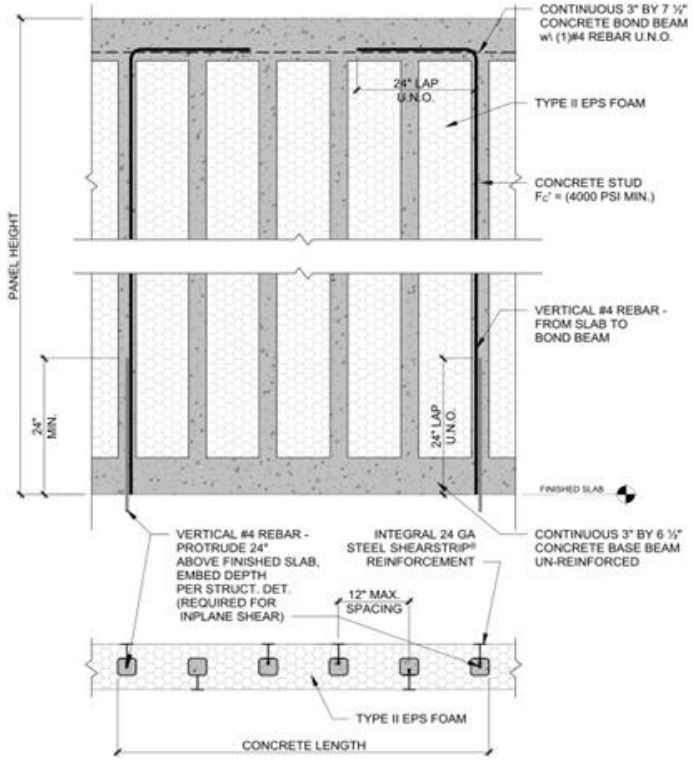

Figure 15 – Typical Reinforced Wall Section and Elevation

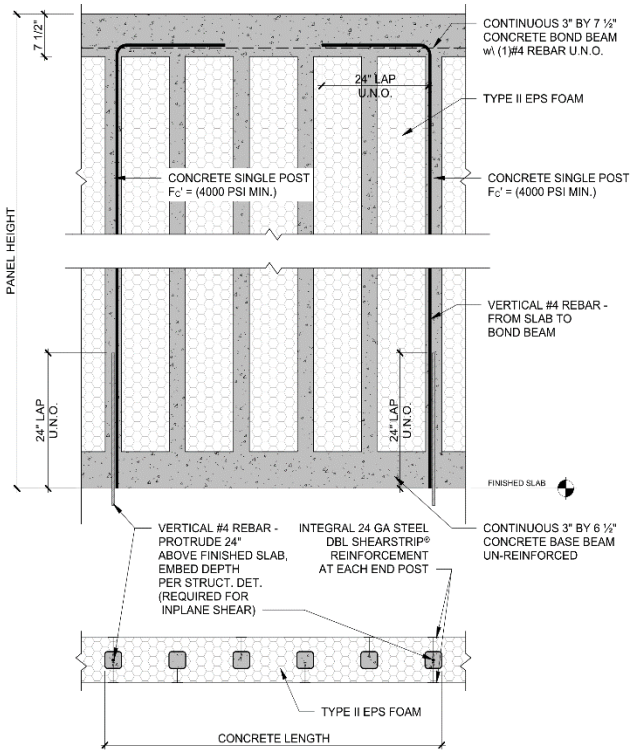

Figure 16 – Typical End Post Reinforced Wall Section and Elevation

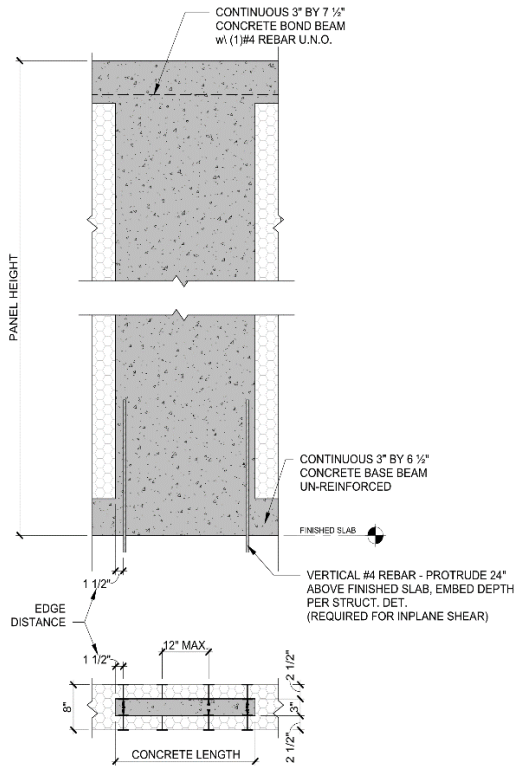

Figure 17– Typical Unreinforced Solid Shear Wall Section and Elevation

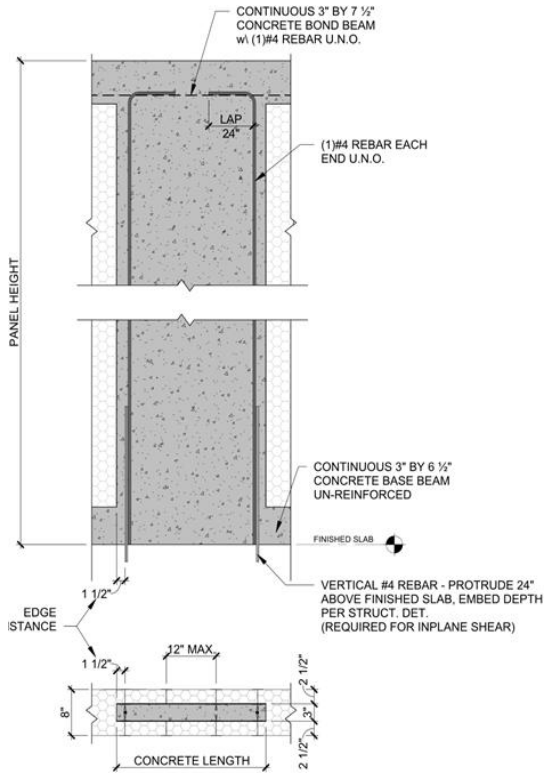

Figure 18 – Typical Reinforced Solid Shear Wall Section and Elevation

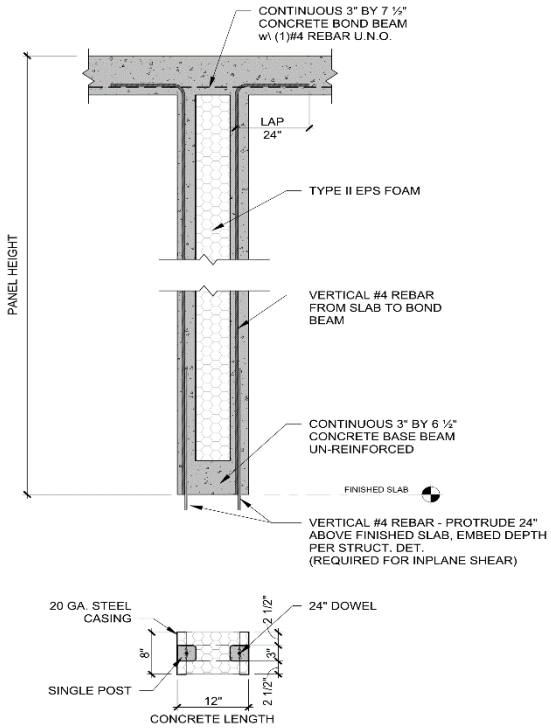

Figure 19– Typical Door / Window Between Panel Section and Elevation

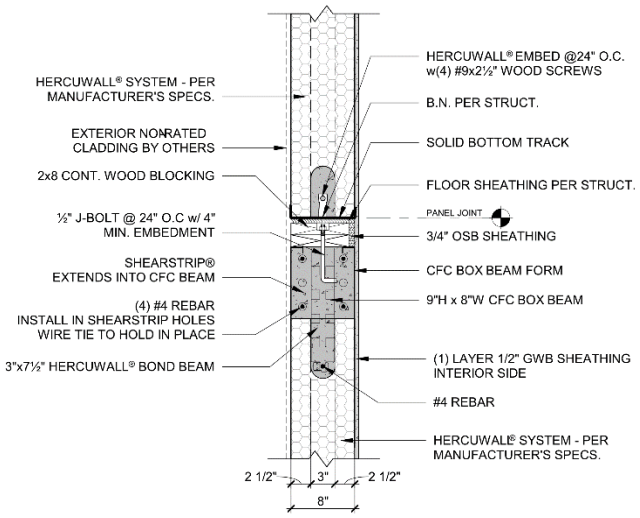

Figure 20 – Typical CFC Box Beam Wall Construction with Lumber Embed

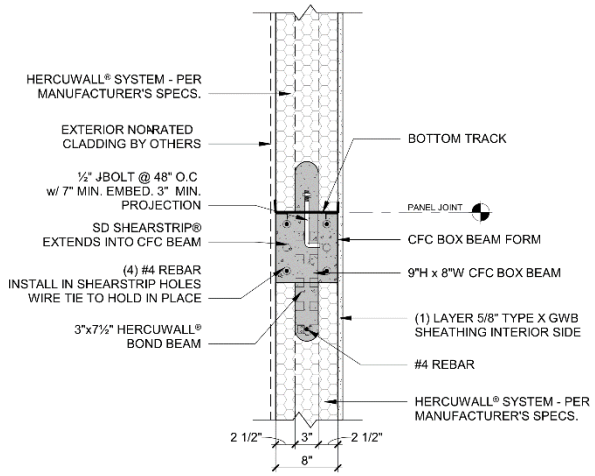

Figure 21– Typical CFC Box Beam Wall Construction Concrete Option

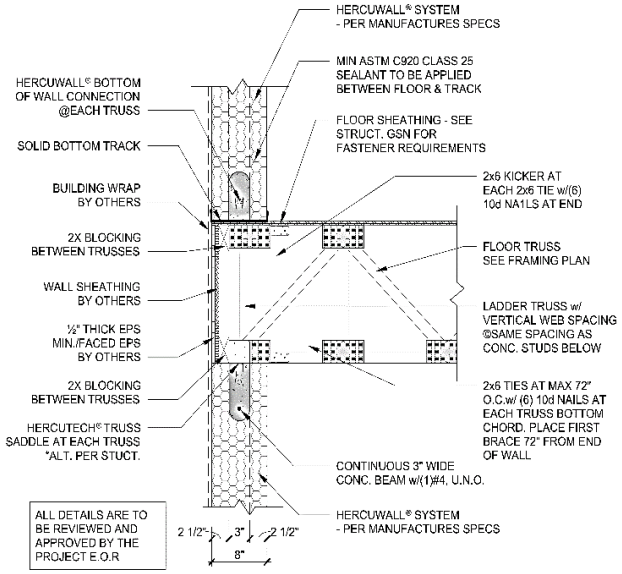

Figure 22 – Typical Truss Perpendicular to Wall (Section)

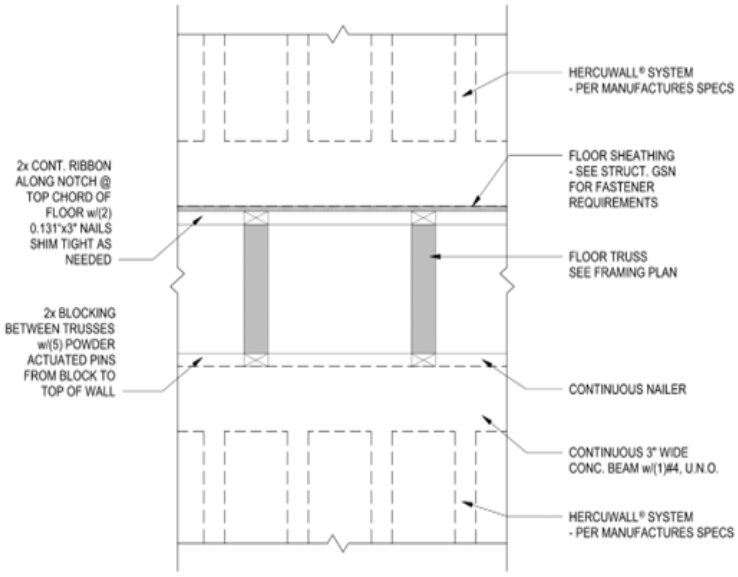

Figure 23 – Typical Truss Perpendicular to Wall (Elevation)

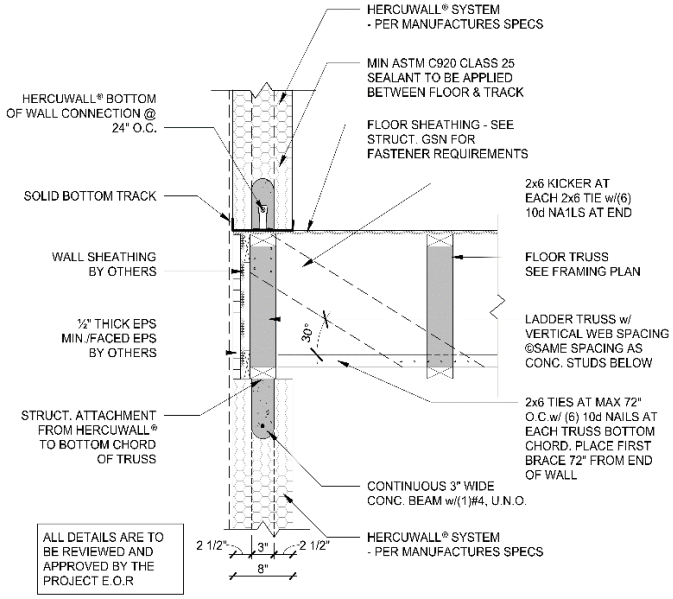

Figure 24 – Typical Truss Parallel to Wall (Section)

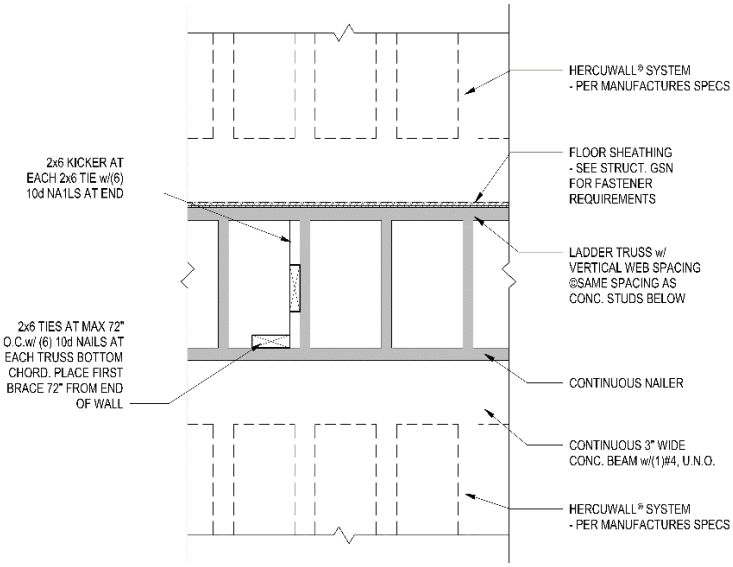

Figure 25 – Typical Truss Parallel to Wall (Elevation)

8.3 Fire-Resistance-Rated Assembly Details:

8.3.1 HercuWall® and HercuWall® HD Series 8 1-hour Load Bearing Fire-Resistance-Rated Assemblies.

8.3.1.1 HercuWall® and HercuWall® HD Series 8 1-Hour Load-Bearing Wall Design[1]

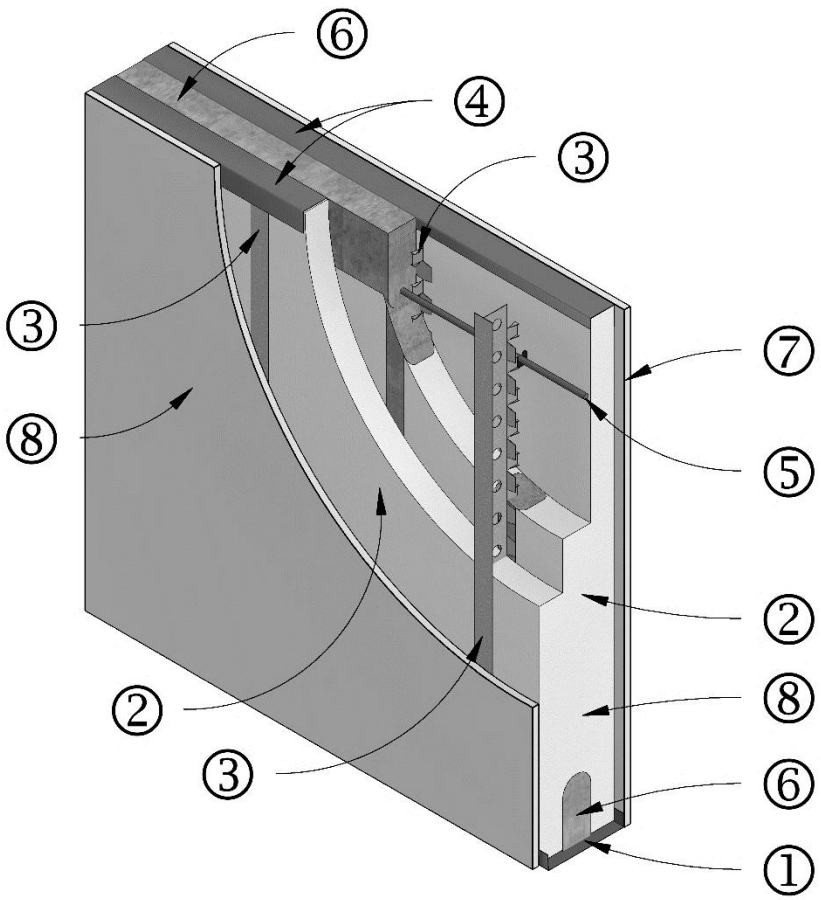

Figure 26. HercuWall® and HercuWall® HD 1-Hour Load-Bearing Fire-Resistance Rated Wall Assemblies.

Table 29. HercuWall® and HercuWall® HD Series 8, 1-hour Load Bearing Fire-Resistance-Rated Assemblies Description[1]

ITEM	COMPONENT	DESCRIPTION	
1	Bottom Track	Manufacturer:	HercuTech Inc.
		Minimum Size:	24-gauge (0.022 inches) (0.55 mm) thickness. 8 inches (203 mm) depth.
		Installation:	Caulked and pinned to the foundation or underlying wall per manufacturers specifications.
2	HercuWall® Panel	Manufacturer:	HercuTech Inc.
		Approved Types:	HercuWall® and HercuWall® HD Type S, Type SW, Type A products, Type II (1.5 lbs/ft^3) nominal density. Solid Shear panel products, Type IX (2.0 lbs/ft^3) nominal density (not shown).
		Installation:	HercuWall® and HercuWall® HD panels are insert into the bottom track and fastened through the bottom track into the ShearStrip® with one #8 x 3/4-inch (19 mm) screws into each ShearStrip® to locate the panels.
3	ShearStrip®	Manufacturer:	HercuTech Inc.
		Minimum Thickness:	HercuWall®: 24-gauge (0.022 inches) (0.55 mm) thickness, 2 inches (51 mm) width. HercuWall® HD: 20- gauge (0.033 inches) (0.84 mm) thickness, 2 inches (51 mm) width.
		Installation:	ShearStrip® are factory installed in HercuWall® panels.
4	Top Track	Manufacturer:	HercuTech Inc.
		Minimum Thickness:	24-gauge (0.022 inches) (0.55 mm) thickness. 2.5 inches (64 mm) depth.
		Installation:	1 Top Track is installed on interior face, 1 Top Track is installed on exterior face for 2 Top Tracks per panel. Top Tracks are attached with one #8 x 3/4-inch (19 mm) screws into each ShearStrip®.
5	Reinforcing	Type:	Steel.
		Specifications:	Minimum Grade 60 per ASTM A615.
		Minimum Size:	#4.
		Installation:	Place into the bond beam of the wall and into the prepared rebar hooks (not shown) located in the second from the top position of the shear strip. Rebar size and spacing to be in accordance with the Engineering Design for site.
6	Concrete	Type:	3/8-inch (9.5 mm) aggregate, not to exceed 45%.
		Specifications:	Minimum 4,000 psi (27.6 MPa) compressive strength @ 28 days cure per Section 2.2.10 of this report.
		Installation:	Special Inspection and cylinder testing is required.
7	Interior Finish	Type:	Single layer Type X gypsum board complying with ASTM C1396
		Minimum Thickness:	5/8 inches (16 mm).
		Installation:	Single layer on each face. The gypsum is to be anchored into the underlying ShearStrip® at 8 inches (203 mm) on center around the gypsum perimeter and 12 inches (305 mm) on center spacing in the field, with #6 1.25-inch (32 mm) length Type S drywall screws. Joints and screw heads are to be taped and mudded minimum Level 2 per ASTM C840.
8	Exterior Sheathing	Types:	1) Single layer Type X gypsum board complying with ASTM C1396 or ASTM C1177. 2) Three coat Portland cement-based stucco
		Thickness:	1) Type X gypsum wallboard - Minimum 5/8 inches (16 mm). 2) Three coat stucco – Minimum 7/8 inches (22.2 mm)
		Installation:	1) Single layer on each face. The gypsum is to be anchored into the underlying ShearStrip® at 8 inches (203 mm) on center around the gypsum perimeter and 12 inches (305 mm) on center spacing in the field, with #6 1.25-inch (32 mm) length Type S drywall screws. Joints and screw heads are to be taped and mudded minimum Level 2 per ASTM C840. 2) Stucco installation per ASTM C926. Lath installation per ASTM C1063

Note 1: HercuWall® and HercuWall® HD Series 8 panel assemblies described above, have been evaluated for load-carrying capacity at 100% allowable loading as outlined in Section 8.1 this report.

8.3.1.2 HercuWall® and HercuWall® HD Series 8 CFC Box Beam 1-Hour Load-Bearing Wall Design[1]

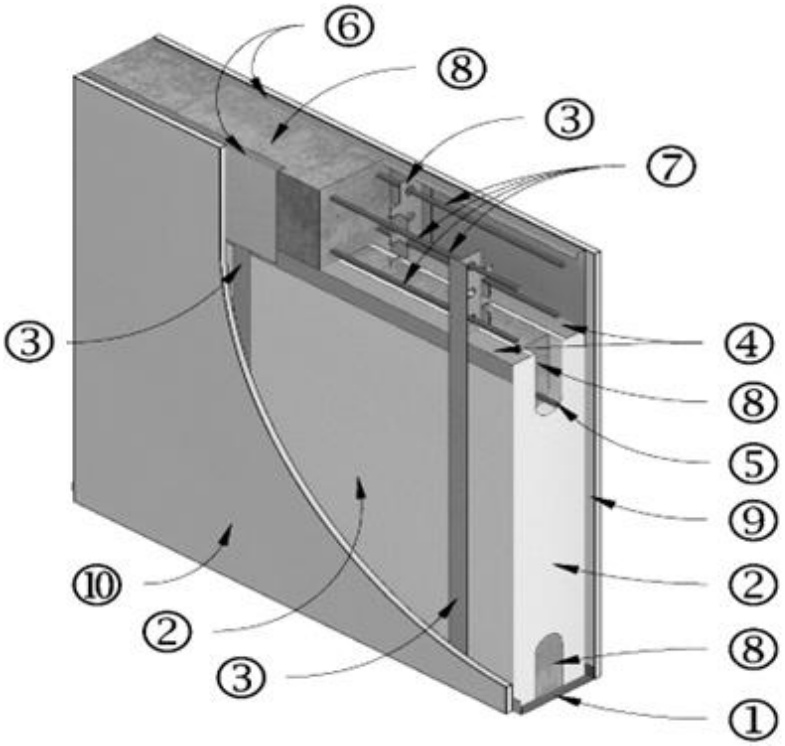

Figure 27a. HercuWall® and HercuWall® HD 1-Hour Load-Bearing Fire-Resistance Rated CFC Box Beam Wall Assembly Design.

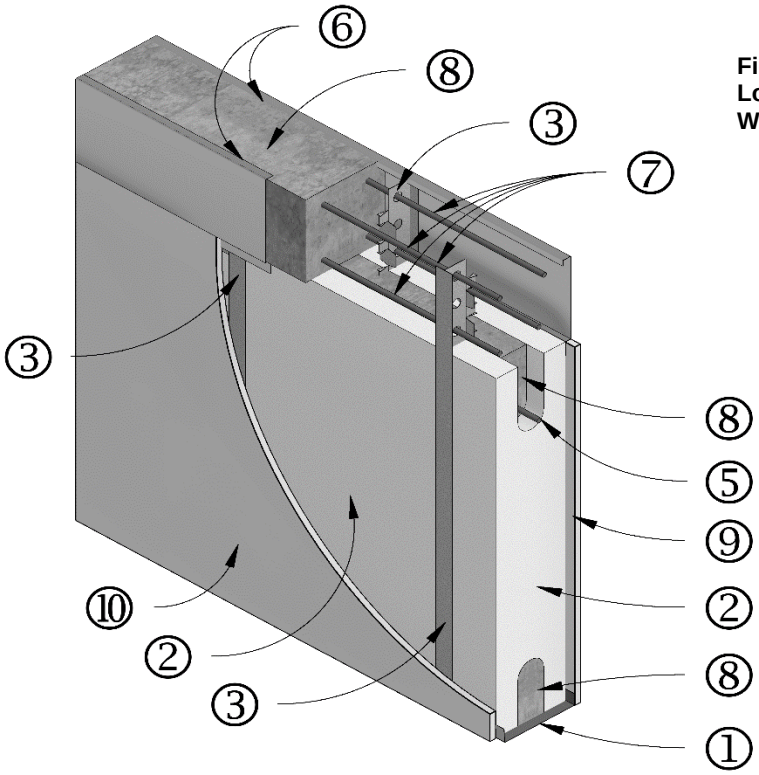

Figure 27b. HercuWall® and HercuWall® HD 1-Hour Load-Bearing Fire-Resistance Rated CFC Box Beam Wall Assembly Design.

Table 30. HercuWall® and HercuWall® HD Series 8, 1-hour Load Bearing Fire-Resistance-Rated CFC Box Beam Wall Assembly[1]

ITEM	COMPONENT	DESCRIPTION	
1	Bottom Track	Manufacturer:	HercuTech Inc.
		Minimum Size:	24-gauge (0.022 inches) (0.55 mm) thickness. 8 inches (203 mm) depth.
		Installation:	Caulked and pinned to the foundation or underlying wall per manufacturers specifications.
2	HercuWall® Panel	Manufacturer:	HercuTech Inc.
		Approved Types:	HercuWall® and HercuWall® HD Type S, Type SW, Type A products, Type II (1.5 lbs/ft^3) nominal density. Solid Shear panels products, Type IX (2.0 lbs/ft^3) nominal density (not shown).
		Installation:	HercuWall® and HercuWall® HD panels are insert into the bottom track and fastened through the bottom track with one #8 x 3/4-inch (19 mm) screw into each ShearStrip® to locate the panels.
3	ShearStrip®	Manufacturer:	HercuTech Inc.
		Minimum Thickness:	24-gauge (0.022 inches) (0.55 mm) thickness, 2 inches (51 mm) width. HercuWall® HD: 20- gauge (0.033 inches) (0.84 mm) thickness, 2 inches (51 mm) width.
		Installation:	ShearStrip® are factory installed in HercuWall® panels.
4	Top Track	Manufacturer:	HercuTech Inc.
		Minimum Thickness:	20-gauge (0.033 inches) (0.84 mm) thickness. 2-inch x 2-inch (64 mm) x 23-inch (584 mm) length
		Installation:	(Optional) 1 Top Track is installed on interior face behind each pair of ShearStrip flanges, 1 Top Track is installed on exterior face behind each pair of ShearStrip flanges. Top Tracks are attached with one #8 x 3/4-inch (19 mm) screws into each ShearStrip®.
5	Panel Reinforcing	Type:	Steel.
		Specifications:	Minimum Grade 60 per ASTM A615.
		Minimum Size:	#4.
		Installation:	Place into the bond beam of the wall and into the prepared rebar hooks (not shown) located in the second from the top position of the shear strip. Rebar size and spacing to be in accordance with the Engineering Design for site.
6	CFC Box Beam	Manufacturer:	HercuTech Inc.
		Minimum Thickness:	16 gauge (0.060 inches) (1.6 mm)
		Installation:	Attach the CFC Box Beam to the HercuWall® Top Track using #8 x 3/4 inch (19 mm) self-tapping screws prior to concrete pour. ½ inch (13 mm) diameter J-bolts or #4 rebar dowels are embedded into the CFC Box Beam concrete and protrude into the Base Beam of the above HercuWall® panel for unbraced stacked panel applications. For braced stacked panel applications, embedded J-bolts are utilized to attach a top plate to the CFC Box Beam. J-bolts spacing, embedment and locations details can be found in Figures 28-30.
7	CFC Box Beam Reinforcing	Type:	Steel.
		Specifications:	Minimum Grade 60 per ASTM A615.
		Minimum Size:	#4.
		Installation:	Insert one bar into the CFC Box Beam through each of the 7/8-inch holes located in the ShearStrip® at 1-3/8-inches (35 mm) and 7-3/8-inches (187 mm) from the top of the ShearStrip® on both interior and exterior sides.
8	Concrete	Type:	3/8-inch (9.5 mm) aggregate, not to exceed 45%.
		Specifications:	Min. 4,000 psi (27.6 MPa) compressive strength @ 28 days cure per Section 2.2.10 of this report.
		Installation:	Special Inspection and cylinder testing is required.
9	Interior Finish	Type:	Single layer Type X gypsum wall board complying with ASTM C1396
		Minimum Thickness:	5/8 inches (16 mm).
		Installation:	Single layer on each face. The gypsum is to be anchored into the underlying ShearStrip® at 8 inches (203 mm) on center around the gypsum perimeter and 12 inches (305 mm) on center spacing in the field, with #6 1.25-inch (32 mm) length Type S drywall screws. Joints and screw heads are to be taped with a minimum Level 2 finish per ASTM C840.
10	Exterior Sheathing	Types:	1) Single layer Type X gypsum wall board complying with ASTM C1396 or ASTM C1177. 2) Three coat Portland cement-based stucco
		Thickness:	1) Type X gypsum wallboard - Minimum 5/8 inches (16 mm). 2) Three coat stucco – Minimum 7/8 inches (22.2 mm)
		Installation:	1) Gypsum Board installation of single layer on each face anchored into the underlying ShearStrip® at 8 inches (203 mm) on center around the gypsum perimeter and 12 inches (305 mm) on center in the field, with #6 1.25-inch (32 mm) length Type S drywall screws. Joints and screw heads are to be taped and mudded with a minimum Level 2 finish per ASTM C840.. 2) Stucco installation per ASTM C926. Lath installation per ASTM C1063.

Note 1: HercuWall® and HercuWall® HD Series 8 panel assemblies described above, have been evaluated for load-carrying capacity at 100% allowable loading as outlined in Section 8.1 of this report.

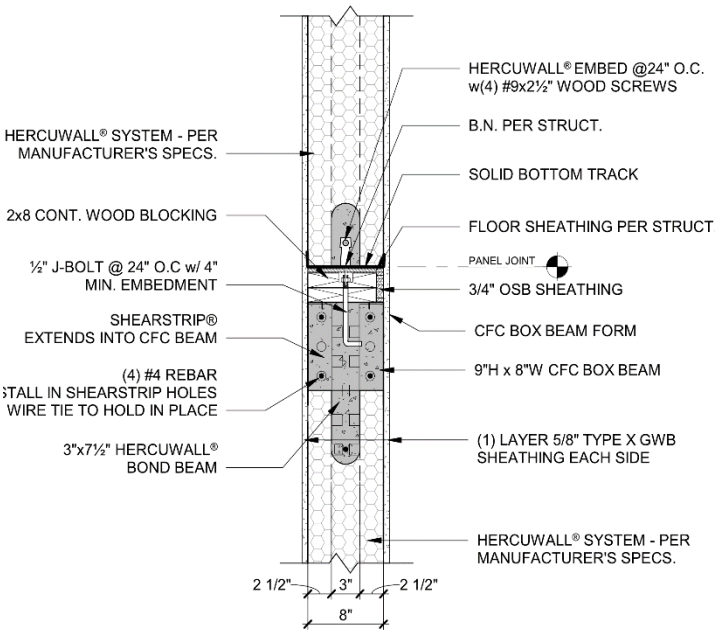

Figure 28 – 1-hr Load-Bearing Unbraced CFC Box Beam Wall

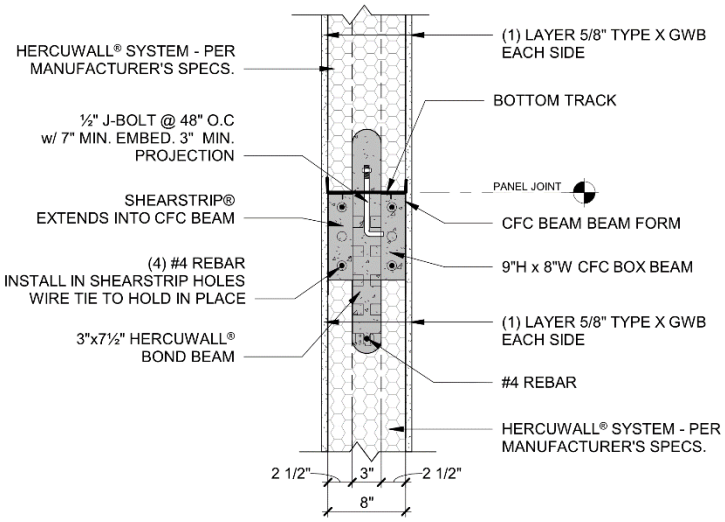

Figure 29– 1-hr Load-Bearing Unbraced CFC Box Beam Wall for Townhouses and Two-Family Dwellings. IRC Section 302.2 compliant where tight to exterior sheathing and Section 302.3 compliant where tight to exterior wall, where assembly extends to roof sheathing.

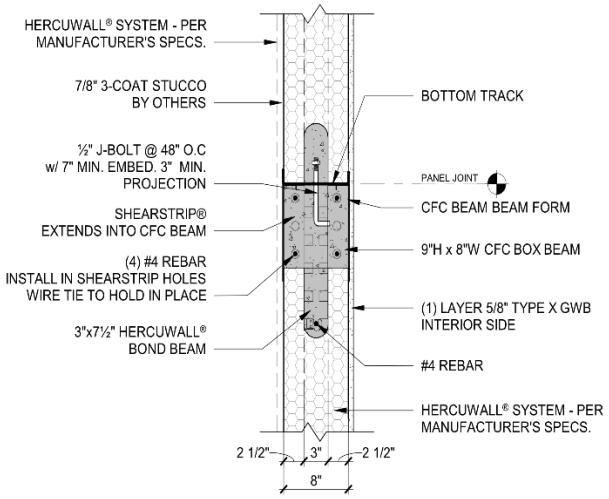

Figure 30 – 1-hr Load-Bearing Unbraced CFC Box Beam Wall

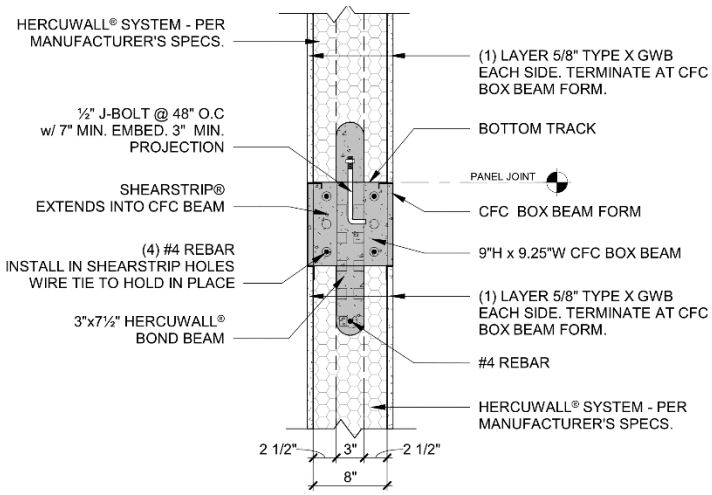

Figure 31 - 1-hr Load-Bearing Braced CFC Box Beam Wall for Townhouses and Two-Family Dwellings. IRC Section 302.2 compliant where tight to exterior sheathing and Section 302.3 compliant where tight to exterior wall, where assembly extends to roof sheathing.

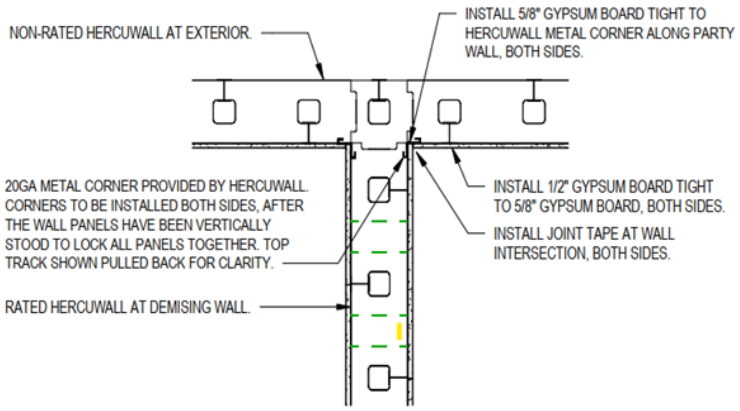

Figure 32 – 1-hr Load-bearing Common Wall for Two-Family Dwellings. IRC Section 302.3 compliant where assembly extends to roof sheathing.

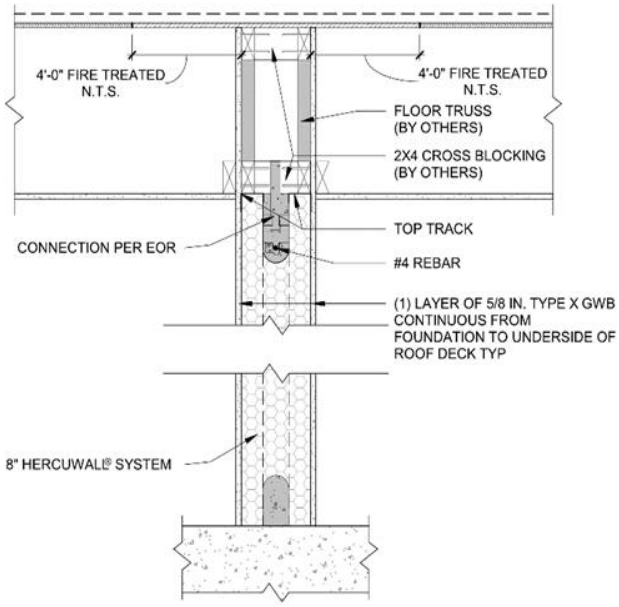

Figure 33 – 1-hr Load-Bearing Attic Transition for Townhouses and Two-Family Dwellings. IRC Section 302.2 compliant where tight to exterior sheathing and Section 302.3 compliant where tight to exterior wall

8.3.2 HercuWall® and HercuWall® HD Series 8, 2-hour Load Bearing Fire-Resistance-Rated Assemblies.

8.3.2.1 HercuWall® and HercuWall® HD Series 8, 2-Hour Load-Bearing Wall Design[1]

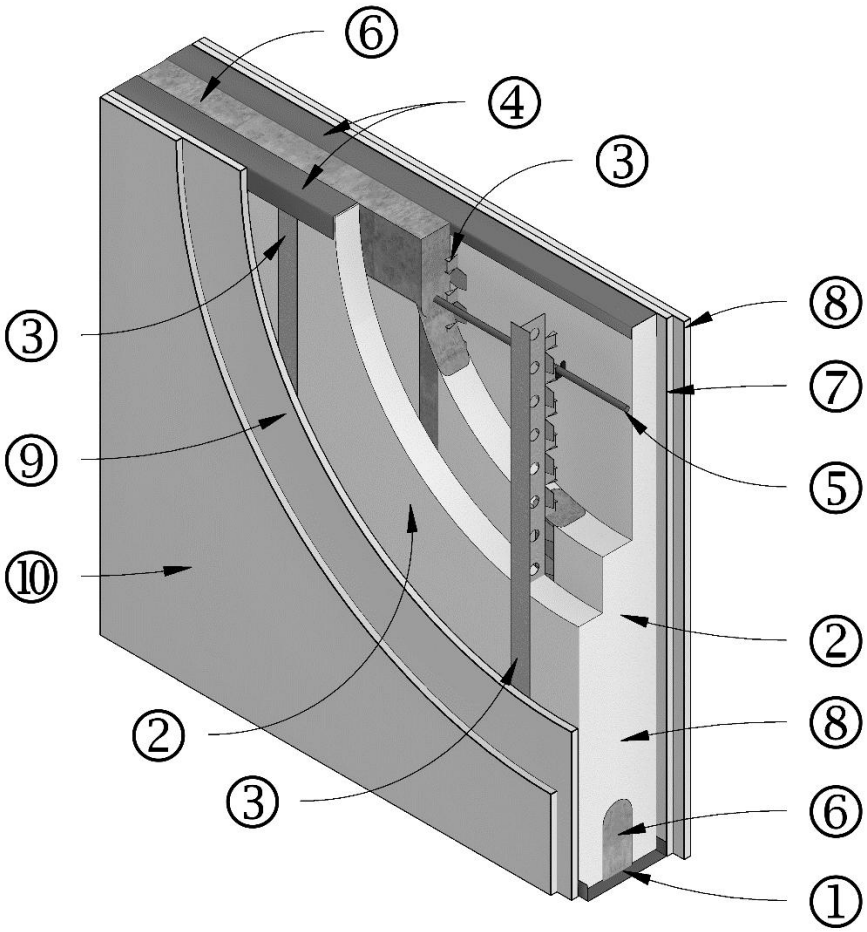

Figure 34. HercuWall® and HercuWall® HD 2-Hour Load-Bearing Fire-Resistance Rated Wall Assemblies

Table 31. HercuWall® and HercuWall® HD Series 8, 2-hour Load Bearing Fire-Resistance-Rated Assemblies Description[1]

ITEM	COMPONENT	DESCRIPTION	
1	Bottom Track	Manufacturer:	HercuTech Inc.
		Minimum Size:	24-gauge (0.022 inches) (0.55 mm) thickness. 8 inches (203 mm) depth.
		Installation:	Caulked and pinned to the foundation or underlying wall per manufacturers specifications.
2	HercuWall® Panel	Manufacturer:	HercuTech Inc.
		Approved Types:	HercuWall® and HercuWall® HD Type S, Type SW, Type A products, Type II (1.5 lbs/ft^3) nominal density. Solid Shear panels, Type IX (2.0 lbs/ft^3) nominal density (not shown).
		Installation:	HercuWall® and HercuWall® HD panels are insert into the bottom track and fastened through the bottom track with one #8 x 3/4-inch (19 mm) screw into each ShearStrip® to locate the panels.
3	ShearStrip®	Manufacturer:	HercuTech Inc.
		Minimum Thickness:	24-gauge (0.022 inches) (0.55 mm) thickness, 2 inches (51 mm) width. HercuWall® HD: 20- gauge (0.033 inches) (0.84 mm) thickness, 2 inches (51 mm) width.
		Installation:	ShearStrip® are factory installed in HercuWall® panels.
4	Top Track	Manufacturer:	HercuTech Inc.
		Minimum Thickness:	24-gauge (0.022 inches) (0.55 mm) thickness. 2.5 inches (64 mm) depth.
		Installation:	1 Top Track is installed on interior face, 1 Top Track is installed on exterior face for 2 Top Tracks per panel. Top Tracks are attached with one #8 x 3/4-inch (19 mm) screws into each ShearStrip®.
5	Reinforcing	Type:	Steel.
		Specifications:	Minimum Grade 60 per ASTM A615.
		Minimum Size:	#4.
		Installation:	Place into the bond beam of the wall and into the prepared rebar hooks (not shown) located in the second from the top position of the shear strip. Rebar size and spacing to be in accordance with the Engineering Design for site.
6	Concrete	Type:	3/8-inch (9.5 mm) aggregate, not to exceed 45%.
		Specifications:	Minimum 4,000 psi (27.6 MPa) compressive strength @ 28 days cure per Section 2.2.10 of this report.
		Installation:	Special Inspection and cylinder testing is required.
7-8	Interior Finish	Type:	Double layer Type X gypsum board complying with ASTM C1396.
		Minimum Thickness:	5/8 inches (16 mm).
		Installation:	Double layer on each face. The first gypsum layer is to be anchored into the underlying ShearStrip® at 8 inches (203 mm) on center around the gypsum perimeter and 24 inches (610 mm) on center spacing in the field, with #6 1.25-inch (32 mm) length Type S drywall screws. The second gypsum layer is to be anchored into the underlying ShearStrip® at 8 inches (203 mm) on center around the gypsum perimeter and 12 inches (305 mm) on center spacing in the field, with #6 2-inch (51 mm) length Type S drywall screws. Joints between gypsum layers are required to have a minimum offset of 24 inches (610 mm). Joints and screw heads are to be taped and mudded with minimum Level 2 finish per ASTM C840 on the exposed layers only.
9-10	Exterior Sheathing	Type:	Double layer Type X gypsum board complying with ASTM C1396 or ASTM C1177.
		Minimum Thickness:	5/8 inches (16 mm).
		Installation:	Double layer on each face. The first gypsum layer is to be anchored into the underlying ShearStrip® at 8 inches (203 mm) on center around the gypsum perimeter and 24 inches (610 mm) on center spacing in the field, with #6 1.25-inch (32 mm) length Type S drywall screws. The second gypsum layer is to be anchored into the underlying ShearStrip® at 8 inches (203 mm) on center around the gypsum perimeter and 12 inches (305 mm) on center spacing in the field, with #6 2-inch (51 mm) length Type S drywall screws. Joints between gypsum layers are required to have a minimum offset of 24 inches (610 mm). Joints and screw heads are to be taped and mudded with a minimum Level 2 finish per ASTM C840 on exposed layers.

Note 1: HercuWall® and HercuWall® HD Series 8 panel assemblies described above, have been evaluated for load-carrying capacity at 100% allowable loading as outlined in Section 8.1 of this report.

8.3.2.2 HercuWall® and HercuWall® HD Series 8 CFC Box Beam 2-Hour Load-Bearing Wall Design[1]

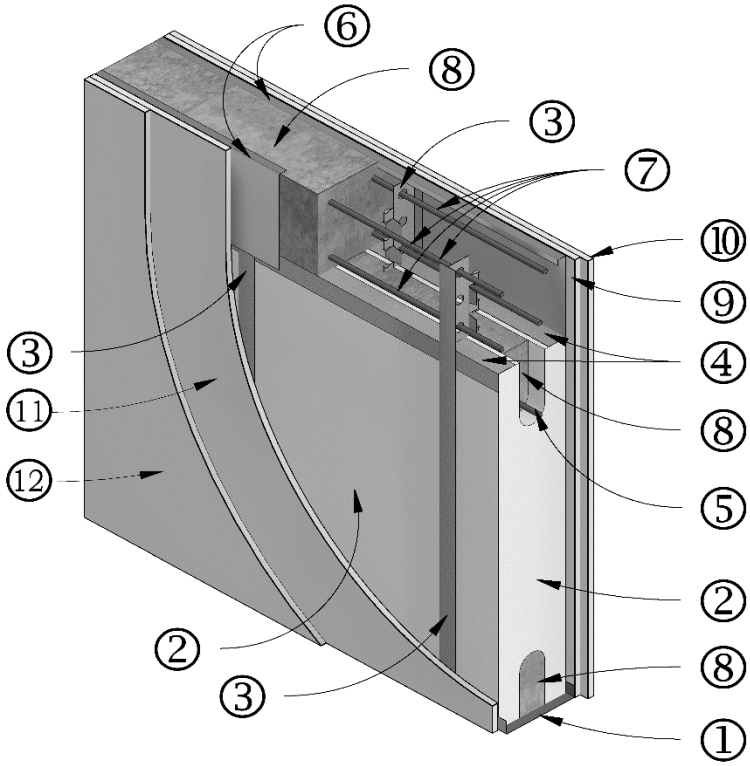

Figure 35a. HercuWall® and HercuWall® HD 2-Hour Load-Bearing Fire-Resistance Rated CFC Box Beam Wall Assembly Design.

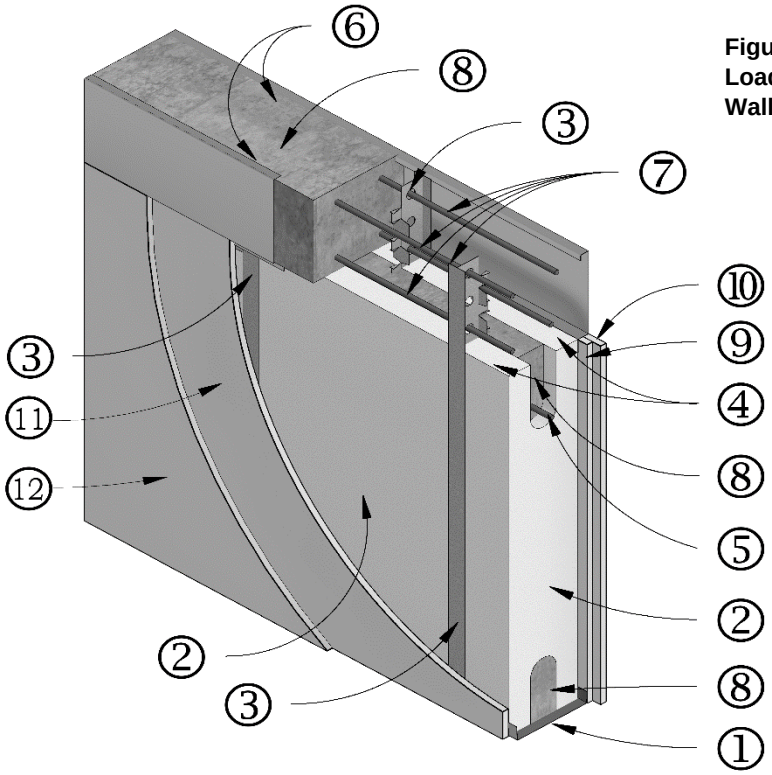

Figure 35b. HercuWall® and HercuWall® HD 2-Hour Load-Bearing Fire-Resistance Rated CFC Box Beam Wall Assembly Design.

Table 32. HercuWall® and HercuWall® HD Series 8, 2-hour Load Bearing Fire-Resistance-Rated CFC Box Beam Wall Assembly[1]

ITEM	COMPONENT	DESCRIPTION	
1	Bottom Track	Manufacturer:	HercuTech Inc.
		Minimum Thickness:	24-gauge (0.022 inches) (0.55 mm) thickness. 8 inches (203 mm) depth.
		Installation:	Caulked and pinned to the foundation or underlying wall per manufacturers specifications.
2	HercuWall® Panel	Manufacturer:	HercuTech Inc.
		Approved Types:	HercuWall® and HercuWall® HD Type S, Type SW, Type A products, Type II (1.5 lbs/ft^3) nominal density. Solid Shear panels, Type IX (2.0 lbs/ft^3) nominal density (not shown).
		Installation:	HercuWall® and HercuWall® HD panels are insert into the bottom track and fastened through the bottom track with one #8 x 3/4-inch (19 mm) screw into each ShearStrip® to locate the panels.
3	ShearStrip®	Manufacturer:	HercuTech Inc.
		Minimum Thickness:	HercuWall®: 24-gauge (0.022 inches) (0.55 mm) thickness, 2 inches (51 mm) width. HercuWall® HD: 20- gauge (0.033 inches) (0.84 mm) thickness, 2 inches (51 mm) width.
		Installation:	ShearStrip® are factory installed in HercuWall® panels.
4	Top Track	Manufacturer:	HercuTech Inc.
		Minimum Thickness:	20-gauge (0.033 inches) (0.84 mm) thickness. 2 inch x 2 inch (64 mm) x 23-inch (584 mm) length.
		Installation:	(Optional) 1 Top Track is installed on interior face behind each pair of ShearStrip®) flanges, 1 Top Track is installed on exterior face behind each pair of ShearStrip® flanges. Top Tracks are attached with one #8 x 3/4-inch (19 mm) screws into each ShearStrip®.
5	Reinforcing	Type:	Steel.
		Specifications:	Minimum Grade 60 per ASTM A615.
		Minimum Size:	#4.
		Installation:	Place into the bond beam of the wall and into the prepared rebar hooks (not shown) located in the second from the top position of the shear strip. Rebar size and spacing to be in accordance with the Engineering Design for site.
6	CFC Box Beam	Manufacturer:	HercuTech Inc.
		Minimum Thickness:	16-gauge (0.060 inches) (1.6 mm)
		Installation:	Attach the CFC Box Beam to the HercuWall® Top Track using #8 x 3/4 inch (19 mm) self-tapping screws prior to concrete pour. ½ inch (13 mm) diameter J-bolts or #4 rebar dowels are embedded into the CFC Box Beam concrete and protrude into the Base Beam of the above HercuWall® panel for unbraced stacked panel applications. For braced stacked panel applications, embedded J-bolts are utilized to attach a top plate to the CFC Box Beam. J-bolts spacing, embedment and locations details can be found in Figures 34-35.
7	CFC Box Beam Reinforcing	Type:	Steel.
		Specifications:	Minimum Grade 60 per ASTM A615.
		Minimum Size:	#4.
		Installation:	Insert one bar into the CFC Box Beam through each of the 7/8-inch holes located in the ShearStrip® at 1-3/8-inches (35 mm) and 7-3/8-inches (187 mm) from the top of the ShearStrip® on both interior and exterior.
8	Concrete	Type:	3/8-inch (9.5 mm) aggregate, not to exceed 45%.
		Specifications:	Minimum 4,000 psi (27.6 MPa) compressive strength @ 28 days cure per Section 2.2.10 of this report.
		Installation:	Special Inspection and cylinder testing is required.
9-10	Interior Finish	Type:	Double layer Type X gypsum wall board complying with ASTM C1396.
		Minimum Thickness:	5/8 inches (16 mm).
		Installation:	Double layer on each face. The first gypsum layer is to be anchored into the underlying ShearStrip® at 8 inches (203 mm) on center around the gypsum perimeter and 24 inches (610 mm) on center spacing in the field, with #6 1.25-inch (32 mm) length Type S drywall screws. The second gypsum layer is to be anchored into the underlying ShearStrip® at 8 inches (203 mm) on center around the gypsum perimeter and 12 inches (305 mm) on center spacing in the field, with #6 2-inch (51 mm) length Type S drywall screws. Joints between gypsum layers are required to have a minimum offset of 24 inches (610 mm). Joints and screw heads are to be taped and mudded with a minimum Level 2 finish per ASTM C840 on exposed layer.
11-12	Exterior Sheathing	Type:	Double layer Type X gypsum wall board complying with ASTM C1396 or ASTM C1177.
		Minimum Thickness:	5/8 inches (16 mm).
		Installation:	Double layer on each face. The first gypsum layer is to be anchored into the underlying ShearStrip® at 8 inches (203 mm) on center around the gypsum perimeter and 24 inches (610 mm) on center spacing in the field, with #6 1.25-inch (32 mm) length Type S drywall screws. The second gypsum layer is to be anchored into the underlying ShearStrip® at 8 inches (203 mm) on center around the gypsum perimeter and 12 inches (305 mm) on center spacing in the field, with #6 2-inch (51 mm) length Type S drywall screws. Joints between gypsum layers are required to have a minimum offset of 24 inches (610 mm). Joints and screw heads are to be taped and mudded with a minimum Level 2 finish per ASTM C840 on exposed layer.

Note 1: HercuWall® and HercuWall® HD Series 8 panel assemblies described above, have been evaluated for load-carrying capacity at 100% allowable loading as outlined in Section 8.1 of this report.

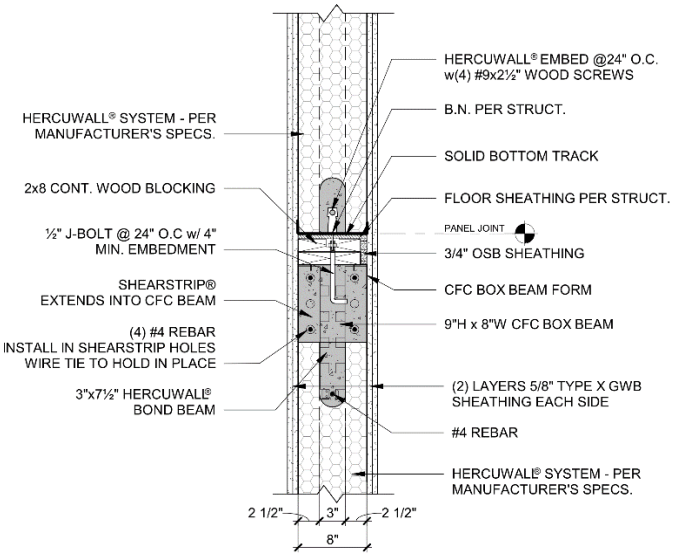

Figure 36 – 2-hr Load-Bearing Unbraced CFC Box Beam Wall

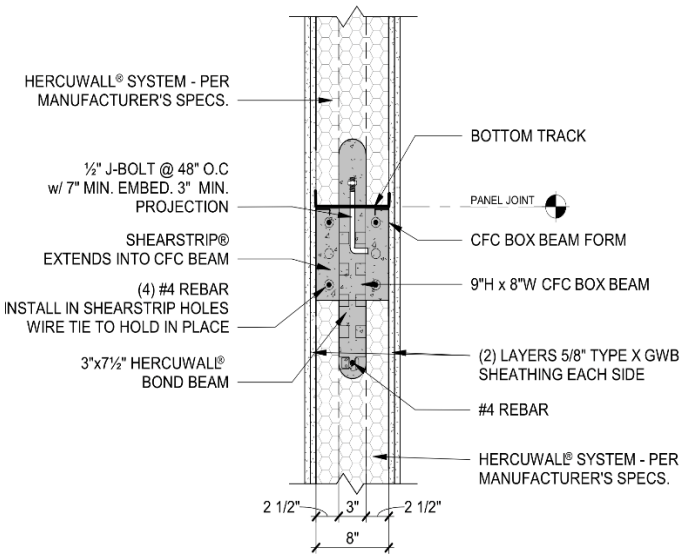

Figure 37 – 2-hr Load-Bearing Unbraced CFC Box Beam Wall approved for Fire Wall and Party Wall where Installed per IBC Section 706 (Type V construction). Approved for Townhouses where installed per IRC Section 302.2 and Two Family Dwellings where installed per IRC Section 302.3.

Floors are required to be on each side at the same elevation for structural stability per IBC Section 706.

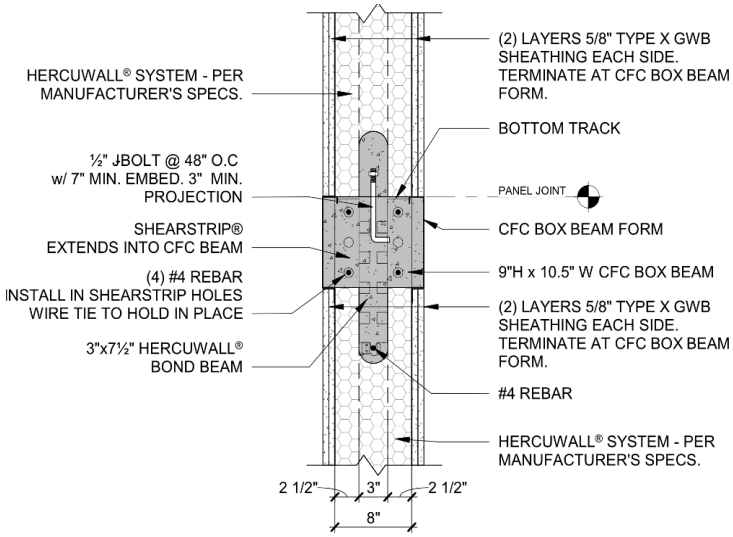

Figure 38 – 2-hr Load-Bearing Braced CFC Box Beam Wall approved for Fire Wall and Party Wall where Installed per IBC Section 706 (Type V construction). Approved for Townhouses where installed per IRC Section 302.2 and Two Family Dwellings where installed per IRC Section 302.3.

Floors are required to be on each side at the same elevation for structural stability per IBC Section 706.

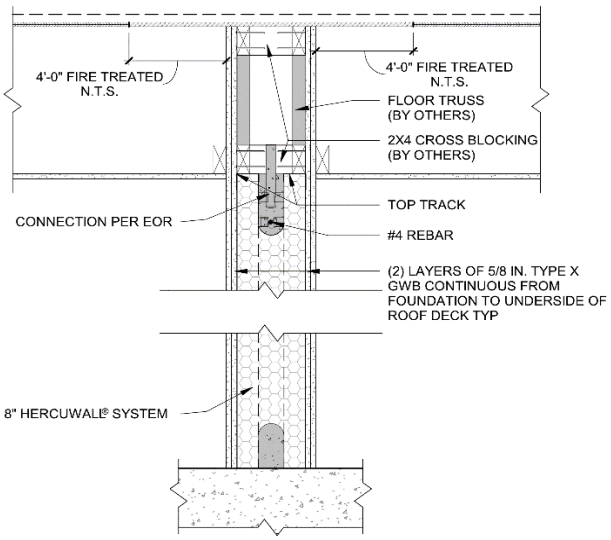

Figure 39 – 2-hr Load-bearing Attic Transition for Townhouses and Two Family Dwellings IRC Section 302.2 compliant where tight to exterior sheathing and Section 302.3 compliant where tight to exterior wall

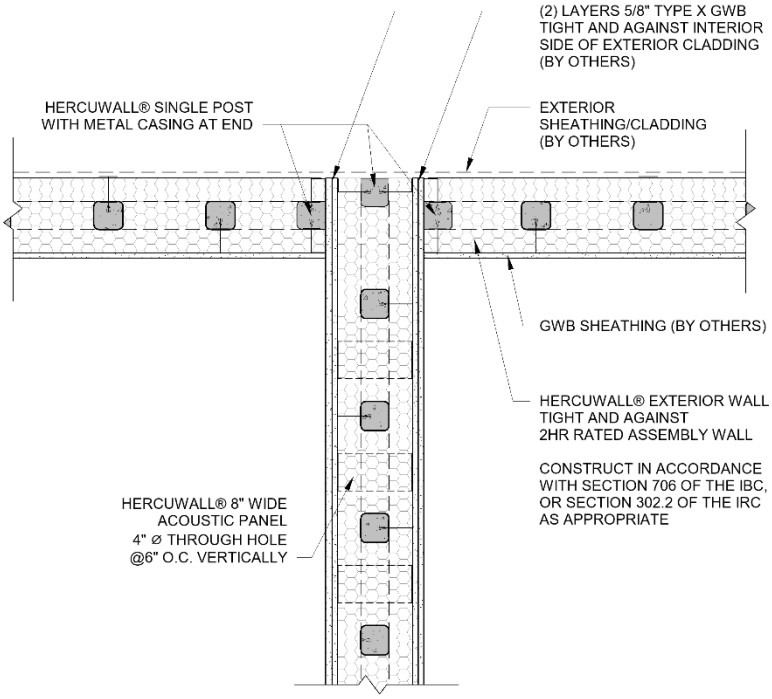

Figure 40 – 2-hr Load-bearing Common Wall approved for Fire wall and Party Wall where Installed per IBC Section 706 (Type V construction). Approved for Townhouses where installed per IRC Section 302.2 and Two Family Dwellings where installed per IRC Section 302.3.

Floors where installed are required to be on each side at the same elevation.

8.4 Types I-IV Construction Assembly Details:

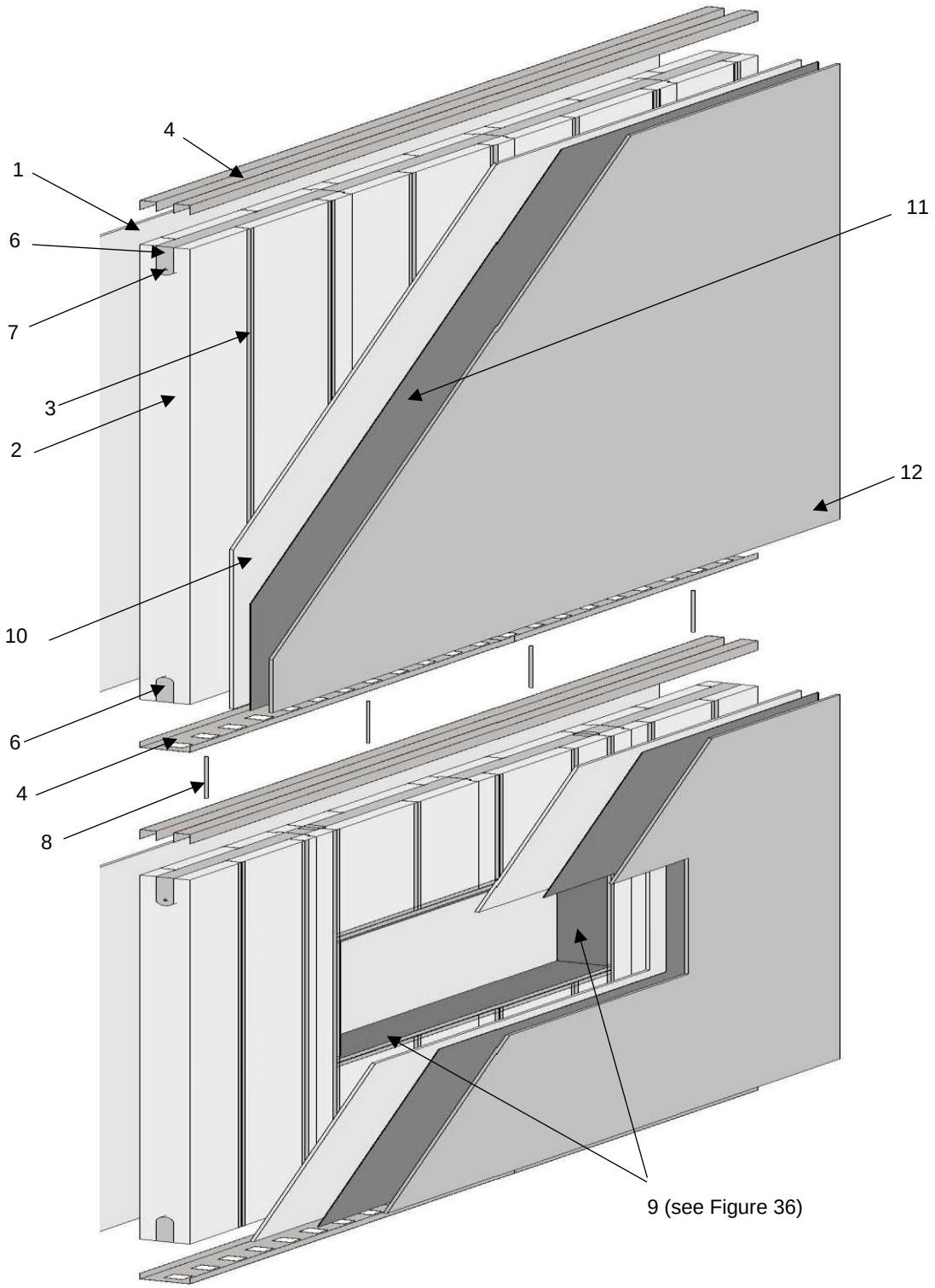

Figure 41. HercuWall® Types I-V Construction Design

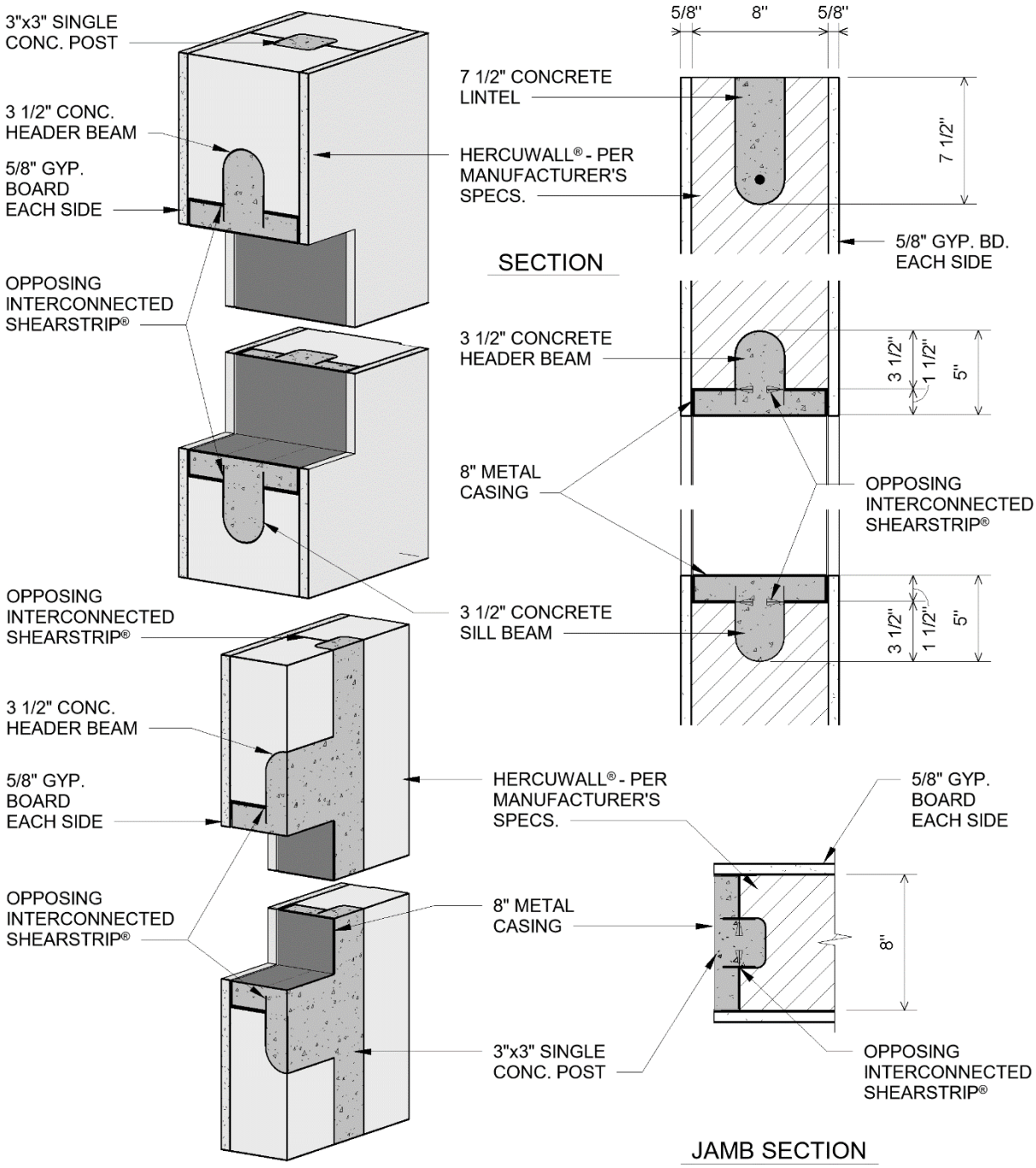

Figure 42. HercuWall® and HercuWall® HD Openings (Window and Door) Opening Design for Types I-IV Construction.

Table 33. HercuWall® and HercuWall® HD Series 8 Type I-IV Construction Wall Assembly[1]

ITEM	WALL COMPONENT	APPROVED MATERIALS
1	Interior Finish	Minimum 5/8-inch (16 mm) thickness, Type X gypsum wall board complying with ASTM C1396. Gypsum to be anchored into ShearStrip® flanges with #6 1.25-inch length Type S drywall screws at 8'' (203 mm) on center around perimeter, and 12'' (305 mm) in field. Joints to be taped and mudded.
2	HercuWall® Panel	HercuWall® and HercuWall® HD Type S, Type SW, Type A products of 8-inch (203 mm) thickness, composed of Type II (1.5 lbs/ft^3) nominal density or Solid Shear (not shown) panels of Type IX (2.0 lbs/ft^3 EPS thermal insulation potential heat of 2,250 BTU/ft^2 (25.5 MJ/m^2) per 1 inch (25 mm) thickness. Concrete stud spacing of 12'' (305 mm), 8 inch (305 mm) or Solid Shear core options. See Section 2.2 of this report.
3	HercuWall® ShearStrip®	HercuWall® ShearStrip® component, alternating in orientation between vertical concrete cavities. See Section 2.2 of this report.
4	HercuWall® Top and Bottom Track	HercuWall® Top and Bottom track component. See Section 2.2 of this report.
5 (not shown)	Concrete Posts	Normal weight 4,000 psi (27.6 MPa) compressive strength at 28 days, See Section 2.2 of this report.
6	HercuWall® Bond Beam and Base Beam	Concrete bond beam and base beam, per Figure 35 of this report.
7	Steel Reinforcing	Minimum #4 Grade 60, located in the Bond Beams. Additional steel reinforcing to be applied in accordance with the Engineering Design. Addition of rebar inclusion does not reduce or detract from the Type I-IV compliance of the HercuWall® Series 8 assembly. See Figure 13 for details.
8	Rebar Dowels	Rebar dowels, of minimum 12 inches (304 mm) length, embedded into top and bottom HercuWall® Series 8 panels to create connections at panel junctions. Spacing of rebar dowels is per Engineering Design for site.
9	HercuWall® Window and Door Casing	HercuWall® door and window casing components. Preparation for ensuring 1-1/2'' (38 mm) concrete coverage around openings before application of casings is required. See Figure 36. For information on window and door casing, see Section 2.2 of this report.
10	Exterior Sheathing	Minimum 5/8-inch (16 mm) thickness, Type X exterior gypsum board sheathing complying with ASTM C1177 or ASTM C1396. Sheathing to be anchored into ShearStrip® flanges with #6 1.25-inch length Type S drywall screws at 8'' (203 mm) on center around perimeter, and 12'' (305 mm) in field. Joints to be taped and mudded.
11	Water-Resistive Barrier	An approved water-resistive barrier, complying to 4.3.1.2 of this report.
12	Approved Exterior Claddings[2]	• Brick Veneer shall be installed with minimum 1 inch (25 mm) (recommended 2-inch (51 mm)) air space. Brick veneer is to be a minimum of 2.625 inches (67 mm) thickness. • Fiber cement lap siding, minimum 0.25-inch (6 mm) thickness complying with ASTM C1186 Type A Grade II labeled by an approved agency classified as non-combustible. • Fiber cement panel siding, minimum 0.25-inch (6 mm) thickness complying with ASTM C1186 Type A Grade II labeled by an approved agency classified as non-combustible. • Glass-fiber reinforced concrete panels, minimum 0.375-inch (9.5 mm) thickness. • Marble slab of minimum 1 inch (25 mm) thickness. • Steel (approved corrosion resistant) of minimum 0.0149 inches (0.38 mm) thickness. • Stone (artificial) of minimum 1.5 inches (38 mm) thickness. • Stone (natural) of minimum 2 inches (51 mm) thickness. • Stucco or Exterior Cement Plaster (see required thickness per substrate type below): Three-Coat Work Over: ○ Metal Plaster Base – Minimum 0.875 inches (22 mm). ○ Unit Masonry – Minimum 0.625 inches (16 mm). ○ Cast in Place or Precast Concrete – Minimum 0.625 inches (16 mm). Two-Coat Work Over: ○ Unit Masonry – Minimum 0.5 inches (13 mm). ○ Cast in Place or Precast Concrete – Minimum 0.375 inches (9.5 mm). • Terra Cotta of minimum 1 inch (25 mm) thickness.

Note 1: HercuWall® and HercuWall® HD Series 8 panel assemblies described above, have been evaluated for load-carrying capacity at 100% allowable loading as outlined in Section 8.1 of this report.
Note 2: Connection of the exterior cladding is to penetrate the ShearStrip® flange and not rely on anchorage into the exterior sheathing. Spacing and fastener type are to match the Engineering Design for resisting intended service loads. Design and connection of exterior cladding is outside the scope of this report.

9. SUPPLEMENTAL CODES

HercuWall® and HercuWall® HD Series 8, Type S, Type SW and Type A products as detailed in Sections 2.0 through 8.0 of QAI CERUS-1003 comply with the 2023 / 2020 Florida Building Code, Building and 2023 / 2020 Florida Building Code, Residential when installed in accordance with the applicable building codes and this report.

HercuWall® and HercuWall® HD Series 8, Type S, Type SW and Type A products comply as *Large Missile Impact Resistant* and *Small Missile Impact Resistant* in accordance with 2023 FBC Section 1626 when installed in accordance with Section 4.4 of this report for design pressures as outlined in Section 8.1 of this report.

HercuWall® and HercuWall® HD Series 8, Type S, Type SW and Type A products comply with Section 2615 High Velocity Hurricane Zones – Plastics of the 2023, 2020, 2017 Florida Building Code.

10. ELIGIBILITY OF REPORT

QAI's Code Evaluation Report complies with the 2021 / 2018 / 2015 IBC Section 104.11 *Alternative materials, design and methods of construction and equipment* subsection 104.11.1 *Research Reports*. Supporting data has been evaluated by QAI for compliance of the noted materials and assemblies to the applicable code by QAI, and *approved* source as detailed below.

The attached report has been reviewed by a QAI Registered Professional Engineer approved by the specific state Board of Professional Engineers noted on the specific P.E. seal(s).

Per section 1703 of the IBC, QAI is an independent third-party testing, inspection and certification agency accredited by the International Accreditation Service, Inc. (IAS) for this specific scope (see IAS PCA-118). QAI can confirm that based on its IAS accreditation it meets IBC Section 1703.1 on Independence, Section 1703.1.2 on Equipment and Section 1703.1 on Personnel.

This Evaluation report has been designed to meet the performance requirements of IBC Section 1703.4 and contains the required information to show the product, material or assembly meets the applicable code requirements.

The product is labeled per section IBC 1703 and subject to follow-up inspection per IBC 1703.6 using QAI IAS accredited ISO/IEC 17020 inspection program (see IAS AA-723).

For more information regarding QAI Laboratories, please visit www.qai.org.

The above is an example of the QAI registered Listing mark. The Listing mark may only be used by the Report Holder per the QAI service agreement on products defined in this report. The 'us' indicator in the 4 o'clock position indicates the product complies with the properties evaluated with limitations outlined in this report for use in the US market. A 'c' indicator in the 4 o'clock position indicates the product has been evaluated for use in the Canadian market.

11. REFERENCED STANDARDS

UL 723 *Test for Surface Burning Characteristics of Building Materials.*
ASTM C578 *Standard Specification for Rigid, Cellular Polystyrene Thermal Insulation*.
ASTM C1396/C1396M *Specification for Gypsum Board*.
ASTM E119 *Standard Test Methods for Fire Tests of Building Construction and Materials*.
NFPA 285 *Standard Fire Test Method for the Evaluation of Fire Propagation Characteristics of Exterior Non-load-bearing Wall Assemblies Containing Combustible Compartments*.
ASTM E72 *Standard Test Methods of Conducting Strength Tests of Panels for Building Construction*.
TAS 201 *Impact Test Procedures.*
TAS 202 *Criteria for Testing Impact & Non-impact Resistant Building Envelope Components Using Uniform Static Air Pressure.*
TAS 203 *Criteria for Testing Products Subject to Cyclic Wind Pressure.*
ASTM D1929 *Standard Test Method for Determining Ignition Temperature of Plastics.*
ASTM E331 *Standard Test Method for Water Penetration of Exterior Windows, Skylights, Doors, and Curtain Walls by Uniform Static Air Pressure Difference*.